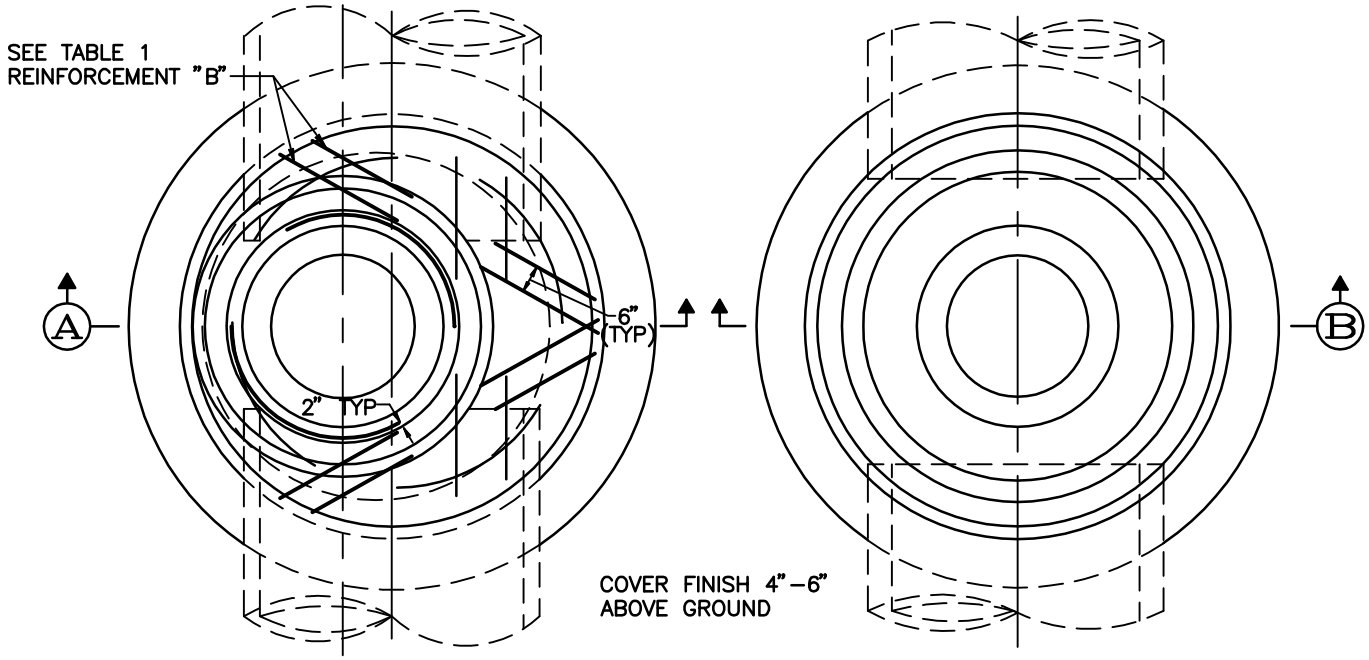

SHALLOW PLAN
COVER NOT SHOWN

STANDARD PLAN
COVER NOT SHOWN

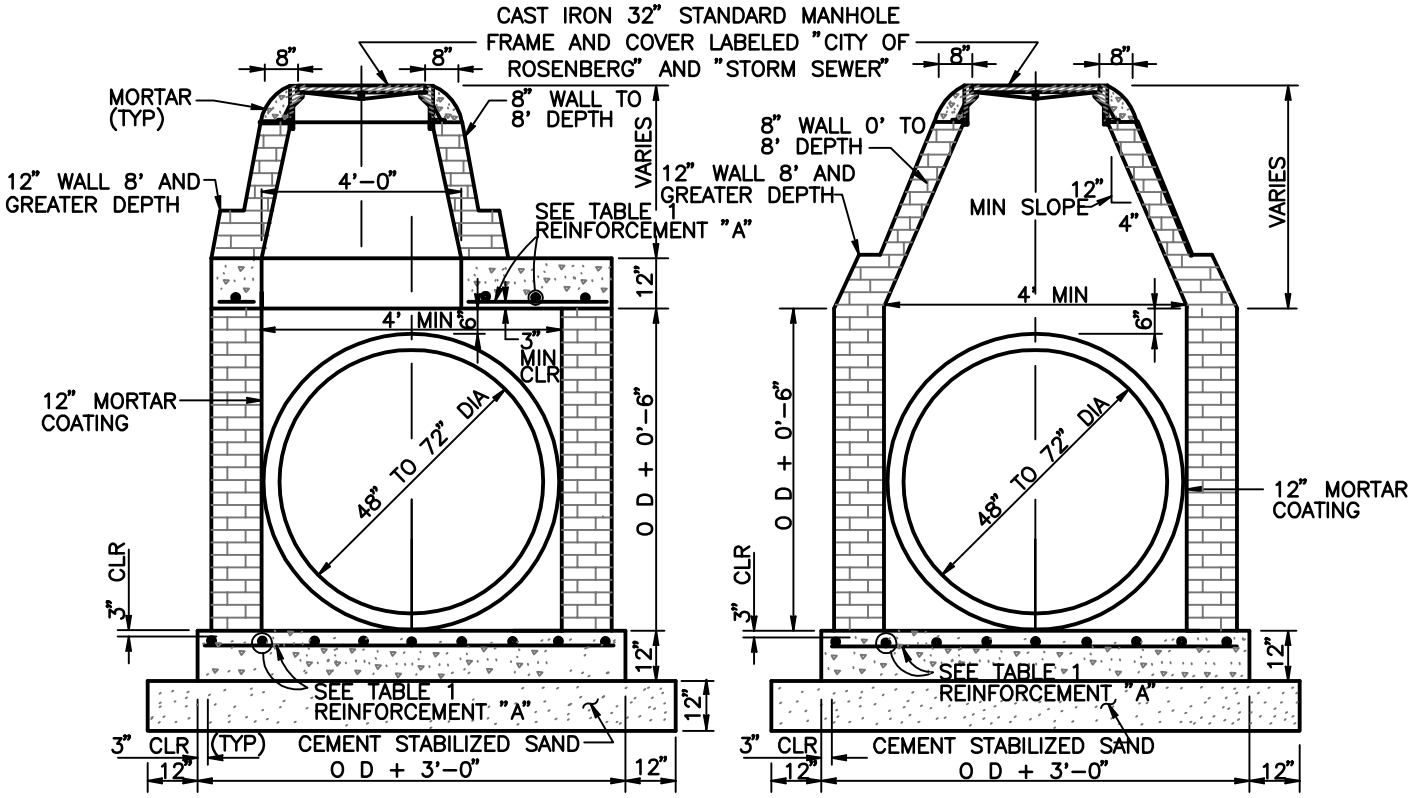

SECTION A

SECTION B

NOTE:
WHEN MANHOLE HAS LESS DEPTH THAN MIN SHOWN ON TABLE 1, BUILD "SECTION A" OTHERWISE BUILD "SECTION B".

TABLE 1
DATA FOR VARIOUS PIPE DIAMETERS

PIPE DIA (INCHES)	MIN DEPTH	REINFORCEMENT ("A")	REINFORCEMENT ("B")
48"	8'–0"	# 5 @ 12 E W	2 – # 6
54"	9'–4"	# 5 @ 10 E W	2 – # 6
60"	10'–7"	# 5 @ 8 E W	2 – # 7
66"	11'–10"	# 5 @ 7 E W	2 – # 7
72"	13'–2"	# 5 @ 6 E W	2 – # 7

THE CITY OF ROSENBERG, FORT BEND COUNTY, TEXAS
DEPARTMENT OF PUBLIC WORKS

STORM SEWER
MANHOLE TYPE "C" FOR 48" TO 72" DIAMETER RCP

DESIGN:	CAD:	SCALE:	DATE:	DRAWING:
CAK	STAFF	NTS	11/10	D–102