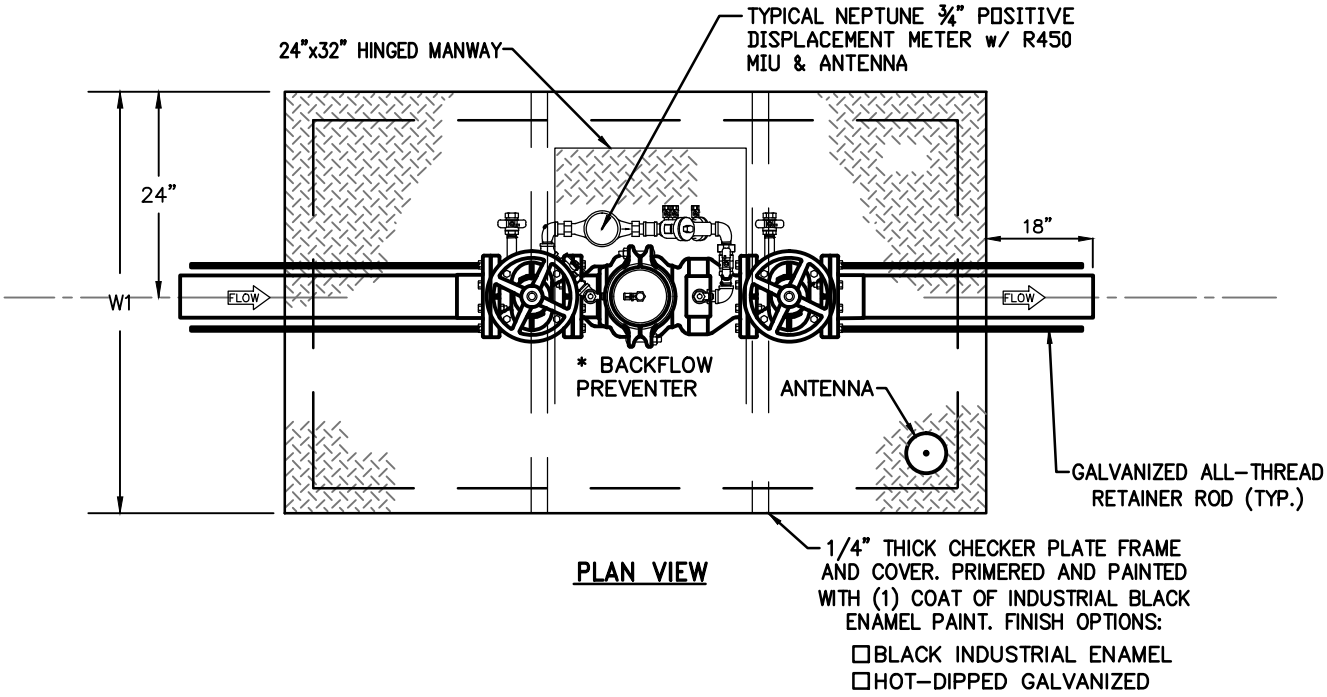

PLAN VIEW

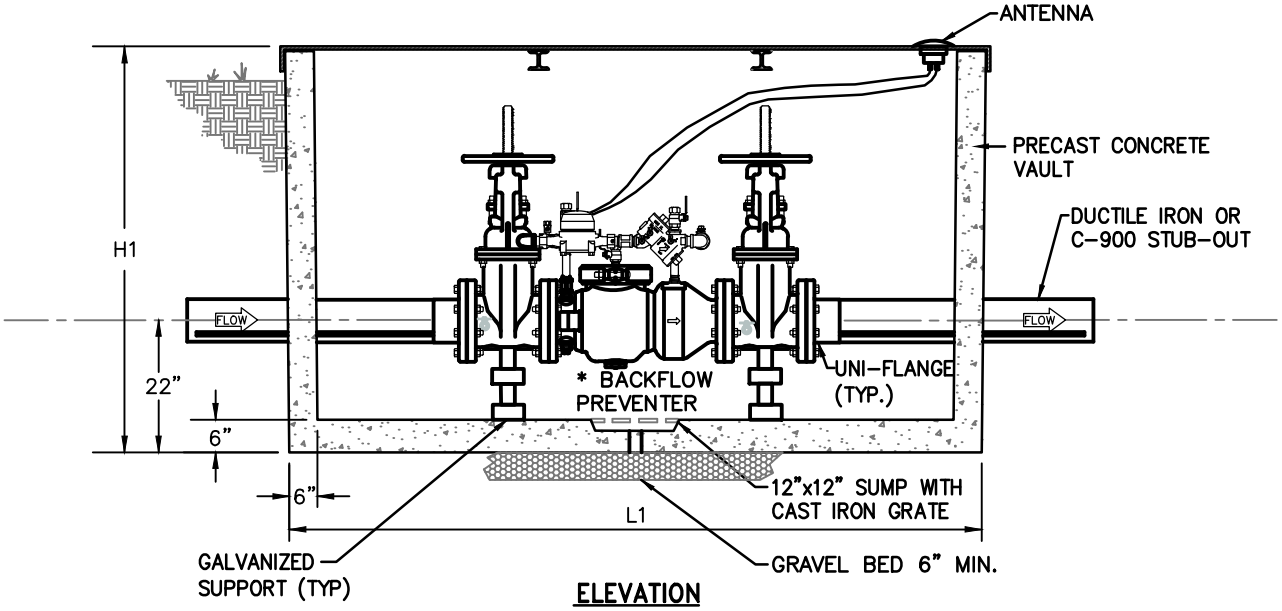

ELEVATION

* DOUBLE CHECK DETECTOR ASSEMBLY

1. ZURN/WILKINS MODEL 350 DA
2. WATTS SERIES 757 DCDA
3. OR APPROVED EQUAL.

SIZE	L1	W1	H1
3"	6'-0"	3'-6"	4'-0"
4"	6'-0"	3'-6"	4'-6"
6"	7'-10"	4'-4"	5'-6"
8"	8'-8"	5'-0"	6'-0"
10"	9'-2"	5'-8"	6'-6"

THE CITY OF ROSENBERG, FORT BEND COUNTY, TEXAS
DEPARTMENT OF PUBLIC WORKS

DETECTOR CHECK VALVE

DESIGN:	CAD:	SCALE:	DATE:	DRAWING:
CAK	STAFF	NTS	11/13	W-109