Permit No.: STW / TXR040272/ CO

Phase II (Small) MS4 Annual Report Form

TPDES General Permit Number TXR040000

A. General Information

1. Permit Number TXR040272 Annual Report Year: 4

   Name of MS4 / Permittee: City of Rosenberg, Texas

   Contact Name: Mr. Charles A. Kalkomey, P.E. Telephone Number: (281) 342-2033

   Mailing Address: 6415 Reading Road, Rosenberg, Texas 77471

   E-mail Address: ckalkomey@jonescarter.com

2. Is the named permittee relying on another entity/ies to satisfy some of its permit obligations? ____ Yes X No

   If "Yes," provide the name(s) of other entity/ies and an explanation of their responsibilities (add more spaces or pages if needed):

   Name and Explanation: N/A

3. Is the named permittee sharing a SWMP with other entities? ____ Yes X No

   a. If the answer to Number 3 is "Yes," list all associated permit numbers and permittee names (add additional spaces or pages if needed):

      Permit Number: N/A Permittee: N/A

   b. If the answer to Number 3 is "Yes," is this a system-wide annual report including information for all permittees?

      N/A Yes ____ No

      Explanation, if any The City of Rosenberg is the sole permittee.

4. Has a copy of this annual report been submitted to the TCEQ Regional Office? X Yes ____ No

B. SWMP Modifications and Additional Information.

Include a brief explanation if you check "Yes" to any of the following statements.

1. a. Changes have been made or are proposed to the SWMP since the NOI or the last annual report, including changes in response to TCEQ's review. _____ Yes _X_____ No

   b. If the answer to Number 1.a. is "Yes," has the TCEQ already approved the original SWMP? _____Yes _____ No

   N/A

   c. If the answer to Number 1.a. is "Yes," indicate whether an NOC (or letter) has been submitted to document the changes to the approved SWMP as required by the general permit. (Note that if an NOC is required, it must be submitted to the address shown on the NOC. Do not attach the original NOC form to this report.) __Yes __No

   N/A

2. The MS4 has annexed lands since obtaining permit coverage. If "Yes," please explain. _____Yes _X___ No
3. A receiving water body is newly listed as impaired or a TMDL has been established. If yes, please explain.

   _____Yes _X_____ No

4. The MS4 has conducted analytical monitoring of storm water quality. _____ Yes _X_____ No

   Explain below or attach a summary to submit along with any monitoring data used to evaluate the success of the SWMP at reducing pollutants to the maximum extent practicable. Be sure to include a discussion of results.

   No monitoring has been required nor has been undertaken.

C. Narrative Provisions

1. Provide information on the status of complying with permit conditions:

	Yes	No	Explain
Permittee is currently in compliance with the SWMP as submitted to and approved by the TCEQ.	X		
Permittee is currently in compliance with recordkeeping and reporting requirements.	X		
Permittee meets the eligibility requirements of the permit (e.g., TMDL requirements, Edwards Aquifer limitations, compliance history, etc.)	X		

2. Provide a general assessment of the appropriateness of the selected BMPs:

   Has the permittee determined that any of the selected BMPs are not appropriate for reducing the discharge of pollutants in storm water? _____ Yes __X____ No

   Provide explanation: ____N/A

3. Describe progress towards reducing the discharge of pollutants to the maximum extent practicable (MEP). Summarize any information used (such as monitoring data) to evaluate reductions in the discharge of pollutants. Use a narrative description or table as appropriate:

MCM	BMP	Parameter	Quantity	Units	Does BMP Demonstrate a Direct Reduction in Pollutants? (Yes / No / Explain)

Or, provide explanation below:

The permittee has continued to provide public education and awareness of reducing the discharge of pollutants. The permittee has also completed staff training and developed waste management procedures pertaining to the permittee's municipal operations. Spill prevention training has been completed and updated. Spill response procedures have been developed and spill response equipment has been purchased and made available at the sites of municipal operations. Contractors are required to have spill response equipment on site as well.

4. Provide a general evaluation of the program's progress, including any obstacles or challenges encountered in implementing BMPs, meeting the program's schedule, etc.:

The program has progressed well. Training has been accelerated by the availability of webinars and videos from nationally recognized vendors and organizations. Information and prevention measures are being articulated in a top down manner so that those in the field, and most likely to deal with incidences, will have the example of superiors to follow. The program has been able to remain mostly on schedule, minus some delays in technical manual adoption. An obstacle has been, and will continue to be, adequate funding to manage and implement the program in a desired manner. However, the permittee has provided sufficient funding to meet the current requirements.

5. Provide the number of construction activities (other than those where the permittee was the operator) that occurred within the regulated area as indicated by notices of intent or site notices:

14

6. Does the permittee utilize the optional seventh MCM related to construction? _____ Yes X No

If "Yes," then provide the following information for this permit year:

a. The number of municipal construction activities authorized under this general permit: N/A

b. The total number of acres disturbed for municipal construction projects: N/A

Though the seventh MCM is optional, implementation must be requested on the NOI or on a NOC and approved by the TCEQ.

7. Requirements for Specific Minimum Controls Measures (MCMs):

a. For MCM 1 - Public Education and Outreach, provide documentation of activities conducted and materials used to fulfill the requirements of this MCM.

See attached appendices.

b. Also for MCM 1, provide documentation of the amount of resources used to address each group (e.g., visitors, businesses, etc.).

See attached appendices.

c. For MCM 3 – Illicit Discharge Detection and Elimination (IDDE), indicate whether you have developed a list of allowable non-storm water discharges, other than those already listed in the general permit. If you have developed a list and have made any changes to the local controls, conditions and/or programs being established for discharges, include this information below. If you do not have any changes for this permit year, indicate that this item is not applicable.

No changes made.

8. Describe any proposed changes to the SWMP in the coming reporting year.

None anticipated at this time.

9. Describe any activities planned for the next permit year, not already described.

The activities as listed for Year 5 in the approved SWMP will be addressed in the next permit year. These include continuing storm drain marking, maintaining a current web site for the program, continued public education and public involvement through mailings, displays, presentations, and volunteer participation, implementation of the Illicit Discharge Ordinance, continued implementation of an Illicit Discharge Training program, continued implementation of the Illicit Discharge Detection and Elimination Program, updating of the storm water mapping, continuation of On-Site Sewerage Disposal Inspection, implementation of the Construction Site Storm Water Runoff Control Ordinance, updating of a technical manual for Construction Site Storm Water Controls, implementation of a Construction Site Plan Review and construction site inspections, continued implementation of the Reporting Hotline, implementation of the Post-Construction Storm Water Management in New Development and Redevelopment ordinance, implementation of recommendations for storm water quality management and procedures to review development plans for long-term inspection and maintenance of structural controls for Post-Construction Storm Water Management in New Development and Redevelopment, updating of a technical manual for Post-Construction Storm Water Management in

New Development and Redevelopment, continuing training and implementation of inspections and procedures for Structural Control Maintenance, Waste Disposal, Litter Control, Spill Prevention and Response, and Municipal Facility Inspections.

D. Storm Water Management Program Status

Provide the status of every BMP and measurable goal listed in the SWMP, as described in the instructions. Each MCM, but not necessarily each BMP, must include the measurable goals described in the SWMP. For a shared SWMP, include the name of the responsible MS4 operator(s) in the "BMP" column. *(Though an MS4 is not required to implement BMPs until the initial SWMP is approved by the TCEQ, the MS4's initial annual report should include a description of what has been done to date, even if the SWMP has not yet been approved. The MS4 will receive credit for all BMPs implemented prior to and during the first permit year if they are described in the initial annual report.)*

Table 1 – BMP Status

MCM(s)	BMP	Milestones of Permit Year	New or Revised	Start Date	Status / Completion Date (completed, in progress, not started)
1: Public Education	1: Storm Drain Marking	Approximately 100% installed. Construction Detail was revised in Year 1.		August 2007	In progress (ongoing) Identification of inlets and marking method completed May 2008 (Year 1). Marking of existing inlets completed in Year 2. Newly constructed inlets will continue to be marked. City currently updating inlet map with GPS coordinates on inlets.

MCM(s)	BMP	Milestones of Permit Year	New or Revised	Start Date	Status / Completion Date (completed, in progress, not started)
	2:Municipal Website	Year 3 Annual Report and SWMP events posted.		August 2007	In progress (ongoing) SWMP items have been incorporated into the City website, including the Years 1, 2, & 3 Annual Reports and related activities. This is an ongoing component of the SWMP.
	3: Storm Water Quality Educational Material	Distributed pamphlets in utility bills in February 2011 to 8,228 customers and August 2011 to 7,971 customers; displayed in City Hall brochure rack.		August 2007	In progress (ongoing) Example pamphlets were obtained and modified as necessary in Year 1. Distribution was made in Years 2, 3 and 4 and will continue in Year 5.
2: Public Involvement/ Participation	1: Public Notice Requirements	No action in Year 4.		December 2008	Completed December 2008.
	2: Storm Water Quality Volunteer Opportunities	Brochures available for volunteers. (See Appendix 1)		December 2008	In progress (ongoing) Volunteer Groups were contacted to distribute the brochure and other related items in Year 4. Will continue in Year 5.

MCM(s)	BMP	Milestones of Permit Year	New or Revised	Start Date	Status / Completion Date (completed, in progress, not started)
2: Public Involvement/ Participation	3: Make Presentations on Storm Water Management Plan	Presented at City Council meeting open to the public.		February 2008	In progress (ongoing) Presentation to Council was on 11/1/11 for the Year 4 report. This presentation was at a meeting open to the public.
3: Illicit Discharge Detection and Elimination	1: Illicit Discharge Detection Ordinance	Ordinance adopted		January 2009	Completed December 2010.
	2: Illicit Discharge Detection and Elimination Program	Year 4 trainings held by City.		February 2009	In progress (ongoing) Implementation began in Year 3, continued in Year 4, and will continue I n Year 5.
	3: Allowable Non-Storm Water Discharges	No changes in Year 4.		May 2009	Completed May 2009 The list will be reviewed and revised if necessary in Year 5.

MCM(s)	BMP	Milestones of Permit Year	New or Revised	Start Date	Status / Completion Date (completed, in progress, not started)
	4: Storm Drainage System Mapping	Located, identified, mapped and updated drainage features		August 2007	In progress (ongoing) The base map was completed in Year 1. In Year 2, approximately 75% of the drainage features were mapped. In Year 3, approximately 90% of the drainage features were mapped. In Year 4, the City began using GPS coordinates to aid in the mapping process. This will continue in Year 5.
	5: Public Education on Illegal Discharges and Improper Disposal	Brochures distributed to City employees through paycheck inserts in April and August 2011. (See Appendices 1)		January 2009	Completed August 2010 The materials were distributed to City employees through payroll inserts in Year 4.
	6: On-site Sewerage Disposal System Identification and Inspection	On-site sewerage disposal system identification and inspection program continued.		August 2008	In progress (ongoing) Sites identified and annual inspection of sites established.

MCM(s)	BMP	Milestones of Permit Year	New or Revised	Start Date	Status / Completion Date (completed, in progress, not started)
4: Construction Site Storm Water Runoff	1: Construction Site Storm Water Runoff Control Ordinance	Ordinance passed. (See Appendix 2)		August 2009	In progress (ongoing) Completed in Year 4.
	2: Selected BMPs for Construction Site Storm Water Controls	Technical manual adopted (See Appendix 3)		August 2009	In progress (ongoing) Completed in Year 4.
	3: Site Plan Review Program	Criteria checklist of storm water pollution prevention plans finalized in Year 4.		August 2008	In progress (ongoing) Checklist reviewed in Year 4.
	4: Construction Site Inspection Program	Not implemented in Year 4 due to no permits being issued. (See Appendix 4)		August 2008	In progress (ongoing)
	5: Reporting Hotline	Existing Public Works number distributed on utility bills inserts. (See Appendix1)		August 2008	Completed February 2009

MCM(s)	BMP	Milestones of Permit Year	New or Revised	Start Date	Status / Completion Date (completed, in progress, not started)
5: Post-Construction Storm Water Management in New Development and Redevelopment	1: Develop an Ordinance	Ordinance passed. (See Appendix 2)		August 2007	Completed July 2011
	2: Evaluate Regional Storm Water Management System Facilities	No structural controls.			Not started No existing or proposed regional facilities within the MS4. Reevaluation will take place in Year 5.
	3: Plan Requirements, Inspection, and Maintenance Program for Storm Water Structural Controls	No structural controls.			Not started No existing or proposed regional facilities within the MS4. Reevaluation will take place in Year 5.
	4: Adopt a Technical Manual	Technical manuals reviewed. Adopted abridged Harris County (See Appendix 3)			Completed July 2011

MCM(s)	BMP	Milestones of Permit Year	New or Revised	Start Date	Status / Completion Date (completed, in progress, not started)
6: Pollution Prevention/ Good Housekeeping for Municipal Operations	1: Municipal Employee Training	Trainings held in Year 4.		August 2008	In progress (ongoing) Training was scheduled to start in Year 3, but was commenced in Year 2.
	2: Structural Control Maintenance	Inventory of City Structural Controls did not identify any existing structures.		August 2007	Completed August 2009 An inspection and maintenance schedule will be adopted if any structures are constructed.
	3: Waste Disposal	Reviewed and inspected City facilities for proper waste disposal. (See Appendix 5)		August 2007	In progress (ongoing) Regular inspections continued in Year 4. Will continue through Year 5.
	4: Street Sweeping	Priority areas originally adopted were reviewed and adopted.		August 2007	In progress (ongoing) This will continue through Year 5.
	5: Litter Control	Programs to collect litter on a regular basis were continued. (See Appendix 5)		August 2007	In progress (ongoing) This will continue through Year 5.

MCM(s)	BMP	Milestones of Permit Year	New or Revised	Start Date	Status / Completion Date (completed, in progress, not started)
6: Pollution Prevention/ Good Housekeeping for Municipal Operations	6: Spill Prevention and Response	Containment and response equipment was acquired in Year 2.		August 2007	In progress (ongoing) This will continue through Year 5, as new equipment will have to be purchased as existing inventory is depleted.
		Contractors required to have spill kits and comply with prevention and response requirements.		August 2007	In progress (ongoing) This will continue through Year 5.
	7: Facility Inspection Program	Municipal facilities inspected. (See Appendix 5)		August 2008	In progress (ongoing) Inspections started in Year 3 and will continue through Year 5.

Table 2 – Measurable Goals Status

MCM(s)	Measurable Goal(s)	Success	Proposed Changes (submit NOC as needed)
MCM 1 BMP 1	Install markers on inlets	Met goal.	None
MCM 1 BMP 2	Update website to reflect annual report, current SWMP events	Met goal	None
MCM 1 BMP 3	Distribute pamphlets to public.	Met goal	None
MCM 2 BMP 2	Provide support materials to interested volunteers.	Met goal	None
MCM 2 BMP 3	Present SWMP to City Council & public.	Met goal	None
MCM 3 BMP 1	Adopt ordinance.	Met goal	None
MCM 3 BMP 2	Continue training.	Met goal	None
MCM 3 BMP 3	Review list of allowable non-storm water discharge.	Met goal	None

MCM(s)	Measurable Goal(s)	Success	Proposed Changes (submit NOC as needed)
MCM 3 BMP 4	Locate, identify, and map drainage features	Met goal	None
MCM 3 BMP 5	Distribute materials to City employees	Met goal	None
MCM 3 BMP 6	Continue on-site sewerage disposal system ID & inspection program and respond to complaints	Met goal	None
MCM 4 BMP 1	Adopt ordinance for construction site storm water runoff control	Met goal	None
MCM 4 BMP 2	Adopt technical manual	Met goal	None
MCM 4 BMP 3	Implement Site Plan review	Met goal	None
MCM 4 BMP 4	Inspect construction sites	Met goal	None
MCM 4 BMP 5	Set up and publicize hotline	Exceeded goal. Established in Year 2.	None

MCM(s)	Measurable Goal(s)	Success	Proposed Changes (submit NOC as needed)
MCM 5 BMP 1	Adopt ordinance	Met goal	None
MCM 5 BMP 2	Develop an evaluation report of structural controls	N/A	None
MCM 5 BMP 3	Develop review of plans for long-term structural controls	N/A	None
MCM 5 BMP 4	Adopt technical manuals	Met goal	None
MCM 6 BMP 1	Require training	Met goal	None
MCM 6 BMP 2	Develop inspection and maintenance schedule of City structural controls	N/A	None
MCM 6 BMP 3	Review and inspect City facilities for proper waste disposal	Met goal	None
MCM 6 BMP 4	Street sweeping	Met goal	None
MCM 6 BMP 5	Continue programs to collect litter	Met goal	None

MCM(s)	Measurable Goal(s)	Success	Proposed Changes (submit NOC as needed)
MCM 6 BMP 6	Require contractors to include requirements for spill kits and comply with spill response requirements	Met goal	None
MCM 6 BMP 7	Require municipal facilities inspections	Met goal	None

E. Certification

I certify under penalty of law that this document and all attachments were prepared under my direction or supervision in accordance with a system designed to assure that qualified personnel properly gathered and evaluated the information submitted. Based on my inquiry of the person or persons who manage the system, or those persons directly responsible for gathering the information, the information submitted is, to the best of my knowledge and belief, true, accurate, and complete. I am aware that there are significant penalties for submitting false information, including the possibility of fine and imprisonment for knowing violations.

Name (printed): Charles A. Kalkomey, P.E. Title: City Engineer

Signature: Date: 11/1/11

Appendix 1

Pet Care

• When walking your pet, remember to pick up the waste and dispose of it in the garbage or by flushing. Leaving pet waste on the ground increases public health risks by allowing harmful bacteria and nutrients to wash into the storm drain and eventually into local water bodies.

Swimming Pool and Spa

• Drain your swimming pool only when necessary and when chlorine levels are no longer detectable. Whenever possible, drain your pool or spa into the sanitary sewer system.

• Properly store pool and spa chemicals to prevent leaks and spills, preferably in a covered area to avoid exposure to stormwater.

Septic System Use and Maintenance

• Have your septic system inspected by a professional at least every three (3) years, and have the septic tank pumped as necessary (usually every 3-5 years).

• Care for the septic system drainfield by not driving or parking vehicles on it. Plant only grass over and near the drainfield to avoid damage from roots.

• Flush reasonably. Flushing household chemicals like paint, pesticides, oil, and antifreeze can destroy the biological treatment taking place in the system. Other items, such as diapers, paper towels, and cat litter, can clog the septic system and potentially damage components.

Everyone plays a role in polluting stormwater...

Everyone has a role in cleaning it up!

This publication is provided to Rosenberg residents in order to provide information about stormwater pollution prevention.

ROSENBERG STORMWATER MANAGEMENT PROGRAM

Administered by
City of Rosenberg
2110 4th Street, P.O. Box 32
Rosenberg, TX 77471-0032

www.ci.rosenberg.tx.us
REPORTING HOTLINE
Tel 832-595-3301

Visit www.epa.gov/npdes/stormwater or www.epa.gov/nps for more information on stormwater pollution.

Make Your Home The Solution is a publication of the City of Rosenberg A1-11

Make your home

The SOLUTION TO STORMWATER POLLUTION!

A homeowner's guide to healthy habits for clean water.

Make your home

The SOLUTION TO STORMWATER POLLUTION!

As stormwater flows over driveways, lawns, and sidewalks, it picks up debris, chemicals, dirt, and other pollutants. Stormwater can flow into storm sewer systems or directly to a storm sewer, ditch, stream, river, or other water bodies.

Polluted runoff is the Nation's greatest threat to clean water. Anything that enters a storm sewer system is discharged, untreated, into the bodies of water we use for swimming, fishing, and drinking water.

By practicing healthy household habits, homeowners can help keep common pollutants like pesticides, pet waste, grass clippings, and automotive fluids off the ground, out of stormwater, and out of our drinking water.

Adopt these **Healthy Household Habits for Clean Water** today to help protect streams, rivers, wetlands, and coastal waters.

Healthy Household Habits for Clean Water

Vehicle and Garage

- Use a commercial car wash or wash your car on a lawn or other unpaved surface to minimize the amount of dirty, soapy water flowing into the storm drain and eventually into your local water body.
- Check your car, boat, motorcycle, and other machinery and equipment for leaks and spills. Make repairs as soon as possible.
- Clean up spilled fluids with an absorbent material like cat litter or sand, and don't rinse the spills into a nearby storm drain. Properly dispose of the absorbent material.
- Recycle used oil and other automotive fluids at participating service stations. Don't dump these chemicals down the storm drain or dispose of them in your trash.

Lawn and Garden

- Use pesticides and fertilizers sparingly. When use is necessary, use these chemicals in the recommended amounts. Avoid application if the forecast calls for rain; otherwise, chemicals will be washed into your local storm sewer, ditch, stream, river or other bodies of water.
- Select native plants and grasses that are drought and pest-resistant. Native plants require less water, fertilizer, and pesticides.
- Sweep up yard debris, rather than hosing down areas. Compost or recycle yard waste when possible.
- Don't overwater your lawn. Water during the cool times of the day, and don't let water run off into the storm drain.
- Cover piles of dirt and mulch being used in landscaping projects to prevent these pollutants from blowing or washing off your yard and into the storm sewer, ditch, or other local water bodies.
- Vegetate bare spots in your yard to prevent soil erosion.

Home Repair and Improvement

- Before beginning an outdoor project, locate the nearest storm drains and protect them from debris and other materials.
- Sweep up and properly dispose of construction debris such as concrete and mortar.
- Use hazardous substances like paints, solvents, and cleaners in the smallest amounts possible, and follow the directions on the label.
- Clean up spills immediately, and dispose of the waste safely.
- Store substances properly to avoid leaks and spills.
- Purchase and use nontoxic, biodegradable, recycled, and recyclable products whenever possible.
- Clean paint brushes in a sink, not outdoors.
- Filter and reuse paint thinner when using oil-based paints.
- Properly dispose of excess paints through a household hazardous waste collection program, or donate unused paint to local organizations.
- Reduce the amount of paved area and increase the amount of vegetated area in your yard.
- Use native plants in your landscaping to reduce the need for watering during dry periods.
- Consider directing downspouts away from paved surfaces onto lawns and other measures to increase infiltration and reduce polluted runoff.

REMEMBER...

Storm drains connect to water bodies - ONLY RAIN DOWN THE DRAIN!

WHAT CAN YOU DO TO REDUCE STORM WATER POLLUTION?

If you own a car, maintain it so it does not leak oil or other fluids.

Wash your car on the grass or at a car wash so the dirt and soap do not flow down the driveway and into the nearest storm drain.

Do not over fertilize your grass. Never apply fertilizers or pesticides before a heavy rain. If fertilizer falls onto driveways or sidewalks, sweep it up instead of hosing it away.

Mulch leaves and grass clippings or place bagged leaves and clippings at the curb, not in the street. Doing this keeps leaves out of the gutter and from washing into the nearest storm drain.

Turn your gutter downspouts away from hard surfaces and seed bare spots in your yard to avoid erosion.

If have a septic system, maintain it properly by having it pumped every 3 to 5 years. If it is an older system, be sure it can still handle the volume placed on it today. Never put chemicals down septic systems, they can harm the system and seep into the groundwater.

If you own a pet, pick up after your pets and dispose of pet waste in the garbage or by flushing.

Keep lawn and household chemicals tightly sealed and in a place where rain cannot reach them.

Dispose of old or unwanted chemicals at the Fort Bend County hazardous waste collection facility.

Participate in the next Rosenberg Spring Clean-Up.

Attend public hearings or meetings on the topic so you can express your concerns.

Report storm water violations when you spot them.

Keep learning about polluted storm water runoff and tell a friend.

But most importantly... LEAD BY EXAMPLE.

This publication is provided to educate Rosenberg's residents on the issue of storm water pollution and what YOU can do to help.

CITY OF ROSENBERG
FOUNDED 1883

ROSENBERG
STORM WATER
MANAGEMENT PROGRAM

ADMINISTERED BY
CITY OF ROSENBERG
2110 4TH STREET
POST OFFICE BOX 32
ROSENBERG, TX 77471-0032

WWW.CI.ROSENBERG.TX.US
REPORTING HOTLINE
832-595-3301

FOR MORE INFORMATION ON
STORM WATER POLLUTION, VISIT
WWW.EPA.GOV/NPDES/STORMWATER
WWW.EPA.GOV/NPS

Preventing Storm Water Pollution is a publication of the City of Rosenberg R10-09

PREVENTING STORM WATER POLLUTION

Everyone plays a role in creating the pollution in storm water runoff and everyone has a role in cleaning it up. Learn how you can make a difference.

FREQUENTLY ASKED QUESTIONS

STORM WATER RUNOFF IS OUR MOST COMMON CAUSE OF WATER POLLUTION.

Storm water pollution is a challenging water quality problem. Unlike pollution from industry or sewage treatment facilities, storm water pollution is caused by the daily activities of people everywhere. The following information is provided to educate Rosenberg's residents on the issue of storm water pollution and what you can do to help.

FREQUENTLY ASKED QUESTIONS

WHAT IS STORM WATER RUNOFF?

Storm water runoff is water from rain that "runs off" across the land rather than being absorbed into the ground. As this water flows toward the nearest low spot such as a storm sewer, ditch, stream, river, or other body of water, it picks up pollutants such as pesticides, fertilizers, oil, pet waste, leaves, and more that can harm our water and environment. The runoff is not treated in any way.

WHAT IS POLLUTED RUNOFF?

Water from rain either seeps into the ground or "runs off" to lower areas, making its way into storm sewers, ditches, streams, rivers, or other bodies of water. On its way, runoff water can pick up and carry many substances that pollute water. Some – like pesticides, fertilizers, oil and soap – are harmful in any quantity. Others – like sediment from construction, bare soil, or agricultural land, or pet waste, grass clippings and leaves – can harm streams, rivers and other bodies of water if in sufficient quantities. In addition to rain, various human activities like watering, car washing, and malfunctioning septic tanks can also put water onto the land surface. Here, it can create runoff that carries pollutants to creeks, rivers and lakes.

Polluted runoff generally happens anywhere people use or alter the land. For example, in developed areas, none of the water that falls on hard surfaces like roofs, driveways, parking lots or roads can seep into the ground. These impervious surfaces create large amounts of runoff that pick up pollutants. The runoff flows from gutters and storm drains to streams. Runoff not only pollutes, but erodes stream banks. The mix of pollution and eroded dirt muddies the water and causes problems downstream.

WHAT IS NONPOINT SOURCE POLLUTION?

This is another term for polluted runoff and other sources of water pollution that are hard to pinpoint. The term "nonpoint source pollution" comes from the federal Clean Water Act of 1987. There, it is used as a catch-all for all kinds of water pollution that are not well-defined discharges (point sources) from wastewater plants or industries.

Many state agencies have nonpoint source (NPS) management programs that address polluted runoff. Texas NPS program is part of the Texas Commission on Environmental Quality's Division of Water Quality. It serves as the central coordinating agency for the many NPS-related programs operated by various agencies.

WHAT CAUSES POLLUTED STORM WATER RUNOFF?

Polluted storm water runoff generally happens anywhere people use or alter the land. People going about their daily lives are the number one source of storm water pollutants. Most people are unaware of how they impact water quality. Some common examples include over fertilizing lawns, excessive pesticide use, not picking up pet waste, using salt or fertilizer to de-ice driveways, letting oil drip out of their vehicles and littering. Developed areas in general, with their increased runoff, concentrated numbers of people and animals, construction and other activities, are a major contributor to NPS pollution, as are agricultural activities. Other contributors include forest harvesting activities, roadways, and malfunctioning septic systems.

WHY DO WE NEED TO MANAGE STORM WATER AND POLLUTED RUNOFF?

Polluted storm water runoff is the number one cause of water pollution in Texas. In most cases, storm water either does not receive any treatment before it enters our waterways or is inadequately treated. Polluted water creates numerous costs to the public and to wildlife. As the saying goes, "we all live downstream." Communities that use surface water for their drinking water supply must pay much more to clean up polluted water than clean water. Polluted water hurts the wildlife in streams, rivers and other bodies of water. Dirt from erosion, also called sediment, covers up fish habitats, and fertilizers can cause too much algae to grow, which also hurts wildlife by using up the oxygen they need to survive. Soaps hurt fish gills and fish skin, and other chemicals damage plants and animals when they enter the water.

The quantity of storm water is also a problem. When rain water falls on hard surfaces like roads, roofs, driveways and parking lots, it cannot seep into the ground, so it runs off to lower areas. To understand the difference a hard surface makes, consider the difference between one inch of rain falling onto a meadow and a parking lot. The parking lot sheds 16 times the amount of water that a meadow does! Because more water runs off hard surfaces, developed areas can experience local flooding. The high volume of water also causes stream banks to erode and washes the wildlife that lives there downstream.

HOW ARE STORM WATER AND RUNOFF "MANAGED"?

"Best management practices" (BMPs) is a term used to describe different ways to keep pollutants out of runoff and to slow down high volumes of runoff. Preventing pollution from entering water is much more affordable than cleaning polluted water.

Educating residents about how to prevent pollution from entering waterways is one best management practice. Laws that require people and businesses involved in earth disturbing activities – like construction and agriculture – to take steps to prevent erosion are another way to prevent storm water pollution. There are also laws about litter, cleaning up after pets and dumping oil or other substances into storm drains. Education and laws are just two best management practice examples. Some BMPs are constructed to protect a certain area. Some are designed to slow down storm water; others help reduce the pollutants already in it. There are also BMPs that do both of these things. Detention ponds, built to temporarily hold water so it seeps away slowly, fill up quickly after a rainstorm and allow solids like sediment and litter to settle at the pond bottom. Then, they release the water slowly. These ponds are one constructed BMP example. Green roofs, storm drain grates, filter strips, sediment fences and permeable paving are other examples.

WHY ALL THE FUSS ABOUT STORM WATER?

The federal Clean Water Act requires large and medium sized towns across the United States to take steps to reduce polluted storm water runoff. The law was applied in two phases. The first phase addressed large cities. The second phase, often referred to as "Phase II," requires medium and small cities, fast growing cities like Rosenberg, and those located near sensitive waters to take steps to reduce storm water. In Texas, Phase II laws took effect on August 13, 2007. These laws require the City of Rosenberg to do six things:

1) Conduct outreach and education about polluted storm water runoff.
2) Provide opportunities for residents to participate and be involved in conversation and activities related to reducing polluted storm water runoff.
3) Detect illicit discharges (e.g. straight piping or dumping).
4) Control construction site runoff.
5) Control post-construction runoff.
6) Perform municipal housekeeping (e.g. take steps to prevent runoff from city buildings and activities.)

IF IT ONLY AFFECTS STREAMS AND CREEKS, WHY SHOULD YOU CARE?

Storm sewers, ditches, and streams feed into rivers, lakes and the ocean. We all drink water, so we are all affected when our water is polluted. When water treatment costs rise, the price of drinking water goes up. If you like to fish, swim or boat, you may have heard or been affected by advisories warning you not to swim, fish or boat in a certain area because of unhealthy water or too much algae. Shellfish like oysters and clams cannot be harvested from polluted waters, so anyone that enjoys these foods or makes a living from the shellfish industry is affected. Money made from tourism and water recreation can also be impacted, as are businesses and homes flooded by storm water runoff. When we pollute our water, everyone is affected!

HOW DOES THIS BENEFIT THE AVERAGE TAXPAYER?

When our water is polluted, we all pay in one way or another. Damage from urban flooding can raise merchant prices and insurance rates. Sediment and pollution laden water takes more money to treat before it can be used for drinking water. Tourism and recreation businesses suffer along with residents when swimming, fishing and boating are curtailed. Shellfish become more expensive and harder to harvest when shellfish beds close. And the list goes on.

EVERYONE PLAYS A ROLE IN CREATING THE POLLUTION IN STORM WATER RUNOFF.

WHEN WE POLLUTE OUR WATER, EVERYONE IS AFFECTED.

WE ALL HAVE A ROLE IN CLEANING IT UP.

LEAD BY EXAMPLE

Appendix 2

September 21, 2011

Mr. Charles Kalkomey, VP
Jones & Carter, Inc.
6415 Reading Road
Rosenberg, Texas 77471

Re: Certified Copy of City of Rosenberg Ordinance No. 2011-17

Dear Mr. Kalkomey:

Enclosed is a certified copy of City of Rosenberg Ordinance No. 2011-17 that was passed by the City Council at its July 19, 2011 City Council Meeting.

Sincerely,

CITY OF ROSENBERG

Linda Cernosek

Linda Cernosek, TRMC
City Secretary

Enclosure (1 certified copy of Ordinance 2011-17)

cc: Cyndy Powell, Assistant to City Manager

OFFICE OF THE CITY SECRETARY
2110 Fourth Street*P.O. Box 32*Rosenberg, TX 77471-0032*832.595.3340*Fax 832.595.3333

CERTIFICATION

I, Linda Cernosek, City Secretary of the City of Rosenberg, Texas, do hereby certify that I am the custodian of the records of the City of Rosenberg, Texas, and that the attached is a true and correct copy of Ordinance No. 2011-17, *"An Ordinance Amending the Code of Ordinances of the City of Rosenberg, Texas, by deleting Chapter 31, entitled "Storm WaterProtection" in its entirety and substituting the following as a new Chapter 31, entitled "Storm Water Protection"; providing rules and regulations governing discharge into the city's municipal separate storm sewer system; prohibiting certain discharges into or connections to such municipal storm sewer system and declaring such discharges or connections a nuisance; providing definitions; providing regulations for emergency and non-emergency suspension of utility service and storm sewer system access for discharging into or connection with such storm sewer system; providing for a land disturbance permit associated with construction and post construction site storm water runoff; providing a penalty in an amount as provided in Section 1-13 of this code for violation of any provision hereof; repealing all ordinances or parts of ordinances inconsistent or in conflict herewith; and providing for severability."* Ordinance No. 2011-17 was approved by the City of Rosenberg City Council on the 19th day of July, 2011.

WITNESS MY HAND and official Seal of the City of Rosenberg, Texas this 21st day of September, 2011.

SEAL

Linda Cernosek, TRMC
City Secretary
City of Rosenberg, Texas

THE STATE OF TEXAS
COUNTY OF FORT BEND

Before me, the undersigned authority, on this day personally appeared Linda Cernosek, City Secretary of the City of Rosenberg, Texas, known to me to be the person whose name is subscribed to the foregoing instrument, and acknowledged to me that she executed the same for the purpose and consideration therein expressed, and in the capacity therein stated.

Given under my hand and seal of office this 21st day of September, 2011, A.D.

CHRISTINE KRAHN
Notary Public, State of Texas
My Commission Expires
May 16, 2014

NOTARY PUBLIC
IN AND FOR THE STATE OF TEXAS

ORDINANCE NO. 2011-17

AN ORDINANCE AMENDING THE CODE OF ORDINANCES OF THE CITY OF ROSENBERG, TEXAS, BY DELETING CHAPTER 31, ENTITLED "STORM WATER PROTECTION" IN ITS ENTIRETY AND SUBSTITUTING THE FOLLOWING AS A NEW CHAPTER 31, ENTITLED "STORM WATER PROTECTION"; PROVIDING RULES AND REGULATIONS GOVERNING DISCHARGE INTO THE CITY'S MUNICIPAL SEPARATE STORM SEWER SYSTEM; PROHIBITING CERTAIN DISCHARGES INTO OR CONNECTIONS TO SUCH MUNICIPAL STORM SEWER SYSTEM AND DECLARING SUCH DISCHARGES OR CONNECTIONS A NUISANCE; PROVIDING DEFINITIONS; PROVIDING REGULATIONS FOR EMERGENCY AND NON-EMERGENCY SUSPENSION OF UTILITY SERVICE AND STORM SEWER SYSTEM ACCESS FOR DISCHARGING INTO OR CONNECTION WITH SUCH STORM SEWER SYSTEM; PROVIDING FOR A LAND DISTURBANCE PERMIT ASSOCIATED WITH CONSTRUCTION AND POST CONSTRUCTION SITE STORM WATER RUNOFF; PROVIDING A PENALTY IN AN AMOUNT AS PROVIDED IN SECTION 1-13 OF THIS CODE FOR VIOLATION OF ANY PROVISION HEREOF; REPEALING ALL ORDINANCES OR PARTS OF ORDINANCES INCONSISTENT OR IN CONFLICT HEREWITH; AND PROVIDING FOR SEVERABILITY.

* * * * *

Section 1. The Code of Ordinances of the City of Rosenberg, Texas, is hereby amended by deleting Chapter 31, entitled "Storm Water Protection" in its entirety and substituting the following as a new Chapter 31, entitled "Storm Water Protection," to provide as follows:

Chapter 31

STORM WATER PROTECTION

ARTICLE I. IN GENERAL

Section 31-1. Definitions.

Unless a provision explicitly states otherwise, the following terms and phrases, as used in this Chapter, shall have the meanings hereinafter designated.

Active agricultural use means cultivating the soil, producing crops for harvest, and raising or keeping livestock.

Agricultural storm water runoff shall mean any storm water runoff from orchards, cultivated crops, pastures, range lands, and other non-point source agricultural activities, but not discharges from concentrated animal feeding operations, as defined in 40 CFR Section 122.23 or discharges from concentrated aquatic animal production facilities as defined in 40 CFR Section 122.24.

Best Management Practices or *BMP* shall mean schedules of activities, prohibitions of practices, maintenance procedures, and other management practices to prevent or reduce the pollution of the MS4, Waters of the State, and Waters of the United States. BMPs also include treatment requirements, operating procedures, and practices to control plant site runoff, spillage or leaks, sludge or waste disposal, or drainage from raw material storage.

CFR shall mean the *Code of Federal Regulations.*

City shall mean the City of Rosenberg, Texas.

City Manager shall mean the City Manager of the City or the City Manager's authorized representative.

Common plan of development shall mean a construction activity that is completed in separate stages, separate phases, or in combination with other construction activities. A common plan of development is identified by the documentation for the construction project that identifies the scope of the project, and may include plats, blueprints, marketing plans, contracts, building permits, a public notice or hearing, zoning requests, or other similar documentation and activities.

Construction activity shall mean a construction project resulting in land disturbance, which includes clearing, grubbing, grading, excavating, or demolition.

Contaminated shall mean containing a harmful quantity of any substance.

Contamination shall mean the presence of or entry into a public water supply system, the MS4, Waters of the State, or Waters of the United States of any substance that may be deleterious to the public health and/or the quality of the water.

Cosmetic cleaning shall mean cleaning performed for cosmetic purposes. It does not include industrial cleaning, cleaning associated with manufacturing activities, hazardous or toxic waste cleaning, or any cleaning otherwise regulated under federal, state, or local laws.

Discharge shall mean any addition or introduction of any pollutant, storm water, or any other substance whatsoever into the MS4, into Waters of the State, or Waters of the United States.

Discharger shall mean any person who causes, allows, permits, or is otherwise responsible for, a discharge, including, without limitation, any operator of a construction site or industrial facility.

Environmental Protection Agency or *EPA* shall mean the United States Environmental Protection Agency, or any duly authorized official thereof.

Erosion shall mean the wearing away of ground surface by mass wasting or the movement of wind, water and/or ice.

Facility, as used in Article III hereof, shall mean any facility, including construction sites, required by the Federal Clean Water Act to have a permit to discharge storm water associated with industrial activity.

Fire Code shall mean the *2006 International Fire Code*, and all subsequent revisions and updates, as adopted by the City.

Fire Department shall mean the Fire Department of the City of Rosenberg, or any duly authorized representative thereof.

Fire protection water shall mean any water, and any substances or materials contained therein, used by any person other than the Fire Department to control or extinguish a fire.

Harmful quantity shall mean the amount of any substance that will cause pollution of Waters of the State, Waters of the United States, or that will cause lethal or sub-lethal adverse effects on representative, sensitive aquatic organisms, upon their exposure to samples of any discharge into Waters of the State, Waters of the United States, or the MS4.

Impervious surface shall mean a surface that does not allow the absorption of water or fluids; examples include paved streets, gravel or paved areas such as driveways, parking areas, packed earth material, oiled macadam or other treated surfaces; walkways, roof surfaces, patios, and formal planters.

Land disturbance or disturb land shall mean clearing, grubbing, grading, excavating, demolishing, or any other form of disturbing land that consists of:

(i) One or more acre of land; or

(ii) Less than one acre of land that is part of a larger common plan of development or sale that will result in disturbance of one or more acres.

Mobile commercial cosmetic cleaning shall mean power washing, steam cleaning, and any other mobile cosmetic cleaning operation, of vehicles and/or exterior surfaces, engaged in for commercial purposes.

Municipal separate storm sewer system or *MS4* shall mean the system of conveyances (including sidewalks, roads with drainage systems, municipal streets, catch basins, curbs, gutters, ditches, man-made channels, or storm drains) owned and operated by the City and designed or used for collecting or conveying storm water, and that is not used for collecting or conveying sewage.

National Pollutant Discharge Elimination System or *NPDES* shall mean the national program for issuing, modifying, revoking and reissuing, terminating, monitoring and enforcing permits, and imposing and enforcing pretreatment requirements, under sections 307, 402, 318, and 405 of the federal Clean Water Act.

New Development shall mean any of the following activities:

(i) Structural development, including structure of a new building or other structure;

(ii) Expansion or alteration of an existing structure that results in an increase of the footprint of the building or structure;

(iii) Activities that result in land disturbance;

(iv) Creation or expansion of impervious surface(s);

(v) Demolition; and

(vi) Subdivision of land as defined in the City's subdivision requirements.

Non-point source shall mean any source of any discharge of a pollutant that is not a "point source."

Notice of Intent or *NOI* shall mean the Notice of Intent that is required by the NPDES Storm Water Multi-Sector General Permit, the EPA Region 6 NPDES Storm Water Construction general permit, the TCEQ Storm Water Construction general permit, or any similar general permit that is issued by the EPA or the TCEQ.

NPDES permit shall mean a permit issued by EPA (or by the State under authority delegated pursuant to 33 USC § 1342(b)) that authorizes the discharge of pollutants to Waters of the United States, whether the permit is applicable to an individual or group, or on a general area-wide basis.

Operate shall mean drive, conduct, work, run, manage, or control.

Operator, as used in Article III hereof, shall mean the party or parties that either individually or taken together meet the following two criteria: 1) They have operational control over the site specifications (including the ability to make modifications in specifications); and 2) they have the day-to-day operational control of those activities at the site necessary to ensure compliance with SWPPP requirements and any permit conditions.

Person shall mean any individual, partnership, co-partnership, firm, company, corporation, association, joint stock company, trust, estate, governmental entity, or any other legal entity; or their legal representatives, agents, or assigns. This definition includes all Federal, State, and local governmental entities.

Point source shall mean any discernible, confined, and discrete conveyance, including, but not limited to, any pipe, ditch, channel, tunnel, conduit, well, discrete fissure, container, rolling stock, concentrated animal feeding operation, landfill leachate collection system, vessel, or other floating craft from which pollutants are or may be discharged. This term does not include return flows from irrigated agriculture or agricultural storm water runoff.

Pollutant shall mean dredged spoil; solid waste; incinerator residue; sewage; garbage; sewage sludge; filter backwash; munitions; chemical wastes; biological materials; toxic materials; radioactive materials; heat; wrecked or discarded equipment; rock; sand; cellar dirt; and industrial, municipal, recreational, and agricultural waste discharged into water or into the MS4.

Pollution shall mean the alteration of the physical, thermal, chemical, or biological quality of, or the contamination of, any Waters of the State or Waters of the United States, that renders the water harmful,

detrimental, or injurious to humans, animal life, vegetation, or property, or to the public health, safety, or welfare, or impairs the usefulness or the public enjoyment of such Waters for any lawful or reasonable purpose.

Publicly owned treatment works or *POTW* shall mean a sewage treatment plant that is owned, and operated, by the City of Rosenberg.

Redevelopment shall mean any construction, alteration or improvement exceeding one acre in areas which modifies existing land use. Redevelopment also involves those items in *New Development*.

Release shall mean any spilling, leaking, pumping, pouring, emitting, emptying, discharging, injecting, escaping, leaching, dumping, or disposing into groundwater, subsurface soils, surface soils, the MS4, the Waters of the State, or the Waters of the United States.

State shall mean the State of Texas.

Storm water shall mean any flow occurring during or following any form of natural precipitation, and resulting from such precipitation, including snow melt.

Storm water discharge associated with industrial activity shall mean the discharge from any conveyance that is used for collecting and conveying storm water and that is directly related to manufacturing, processing or raw materials storage areas at an industrial plant. The term does not include discharges from facilities or activities excluded from the NPDES program under 40 CFR part 122. For the categories of industries identified in paragraphs (i) through (x) of this definition, the term includes, but is not limited to, storm water discharges from industrial plant yards; immediate access roads and rail lines used or traveled by carriers of raw materials, manufactured products, waste material, or by-products used or created by the facility; material handling sites; refuse sites; sites used for the application or disposal of process waste waters (as defined at 40 CFR part 401); sites used for the storage and maintenance of material handling equipment; sites used for residual treatment, storage, or disposal; shipping and receiving areas; manufacturing buildings; storage areas (including tank farms) for raw materials, and intermediate and finished products; and areas where industrial activity has taken place in the past and significant materials remain and are exposed to storm water. For the categories of industries identified in paragraph (xi) of this definition, the term includes only storm water discharges from all the areas (except access roads and rail lines) that are listed in the previous sentence where material handling equipment or activities, raw materials, intermediate products, final products, waste materials, by-products, or industrial machinery are exposed to storm water. For the purposes of this

paragraph, material handling activities include the storage, loading and unloading, transportation, or conveyance of any raw material, intermediate product, finished product, by-product, or waste product. The term excludes areas located on plant lands separate from the plant's industrial activities, such as office buildings and accompanying parking lots as long as the drainage from the excluded areas is not mixed with storm water drained from the above described areas. Industrial facilities (including industrial facilities that are federally, state, or municipally owned or operated that meet the description of the facilities listed in paragraphs (i)-(xi) of this definition) include those facilities designated under the provisions of 40 CFR §122.26(a)(1)(v). The following categories of facilities are considered to be engaging in "industrial activity":

(i) Facilities subject to storm water effluent limitations guidelines, new source performance standards, or toxic pollutant effluent standards under 40 CFR subchapter N (except facilities with toxic pollutant effluent standards that are exempted under category (xi) of this definition);

(ii) Facilities classified as Standard Industrial Classifications 24 (except 2434), 26 (except 265 and 267), 28 (except 283), 29, 31l, 32 (except 323), 33, 344l, 373;

(iii) Facilities classified as Standard Industrial Classifications 10 through 14 (mineral industry) including active or inactive mining operations (except for areas of coal mining operations no longer meeting the definition of a reclamation area under 40 CFR §434.11(1) because the performance bond issued to the facility by the appropriate federal Surface Mining Control and Reclamation Act (SMCRA) authority has been released, or except for areas of non-coal mining operations that have been released from applicable State or Federal reclamation requirements after December 17, 1990) and oil and gas exploration, production, processing, or treatment operations, or transmission facilities that discharge storm water contaminated by contact with or that has come into contact with, any overburden, raw material, intermediate products, finished products, by-products or waste products located on the site of such operations; (inactive mining operations are mining sites that are not being actively mined, but which have an identifiable owner/operator; inactive mining sites do not include sites where mining claims are being maintained prior to disturbances associated with the extraction, beneficiation, or processing of mined materials, or sites where minimal activities are undertaken for the sole purpose of maintaining a mining claim);

(iv) Hazardous waste treatment, storage, or disposal facilities, including those that are operating under interim status or a permit under subtitle C of the federal Resource Conservation and Recovery Act (RCRA);

(v) Landfills, land application sites, and open dumps that receive or have received any industrial wastes (waste that is received from any of the facilities described under this subsection) including those that are subject to regulation under subtitle D of RCRA;

(vi) Facilities involved in the recycling of materials, including metal scrap yards, battery reclaimers, salvage yards, and automobile junk yards, including, but limited to, those classified as Standard Industrial Classification 5015 and 5093;

(vii) Steam electric power generating facilities, including coal handling sites;

(viii) Transportation facilities classified as Standard Industrial Classifications 40, 41, 42 (except 4221-25), 43, 44, 45, and 5171 which have vehicle maintenance shops, equipment cleaning operations, or airport deicing operations. Only those portions of the facility that are either involved in vehicle maintenance (including vehicle rehabilitation, mechanical repairs, painting, fueling, and lubrication), equipment cleaning operations, airport deicing operations, or which are otherwise identified under paragraphs (i)-(vii) or (ix)-(xi) of this definition are associated with industrial activity;

(ix) Treatment works treating domestic sewage or any other sewage sludge or wastewater treatment device or system, used in the storage treatment, recycling, and reclamation of municipal or domestic sewage, including land dedicated to the disposal of sewage sludge that are located within the confines of the facility, with a design flow of 1.0 mgd or more, or required to have an approved pretreatment program under 40 CFR part 403. Not included are farm lands, domestic gardens or lands used for sludge management where sludge is beneficially reused and which are not physically located in the confines of the facility, or areas that are in compliance with section 405 of the federal Clean Water Act;

(x) Construction activity, including clearing, grading and excavation activities, except: operations that result in the disturbance of less than one acre of total land area that are not part of a larger common plan of development or sale;

(xi) Facilities under Standard Industrial Classifications 20, 21, 22, 23, 2434, 25, 265, 267, 27, 283, 285, 30, 31 (except 311), 323, 34 (except 3441), 35, 36, 37 (except 373), 38, 39, 4221-25, (and which are not otherwise included within categories (ii)-(x) of this definition).

Storm water pollution prevention plan or *SWPPP* shall mean a plan required by a permit to discharge storm water associated with industrial activity, including construction, and which describes and ensures the implementation of practices that are to be used to reduce the pollutants in storm water discharges associated with industrial activity at the facility.

TAC shall mean the *Texas Administrative Code.*

TCEQ shall mean the Texas Commission on Environmental Quality.

Texas Pollutant Discharge Elimination System or *TPDES* shall mean the program delegated to the State of Texas by the EPA pursuant to 33 USC §1342(b).

Total suspended solids or *TSS* shall mean solids that either float on the surface, or are in suspension in, water, wastewater, or other liquids, and which are generally removable by a laboratory filtration device. TSS is expressed in milligrams per liter.

Uncontaminated shall mean not containing a harmful quantity of any substance.

USC shall mean the *United States Code.*

Wastewater shall mean any water or other liquid, other than uncontaminated storm water, discharged from a facility.

Waters of the State shall mean groundwater, percolating or otherwise, lakes, bays, ponds, impounding reservoirs, springs, rivers, streams, creeks, wetlands, marshes, inlets, canals inside the territorial limits of the State, and all other bodies of surface water, natural or artificial, navigable or non-navigable, and including the bed and banks of all watercourses and bodies of surface water that are wholly or partially inside or bordering the State or inside the jurisdiction of the State.

Waters of the United States shall mean all waters that are currently used, were used in the past, or may be susceptible to use in interstate or foreign commerce; all interstate waters, including interstate wetlands; all

other waters the use, degradation, or destruction of which would affect or could affect interstate or foreign commerce; all impoundments of waters otherwise defined as Waters of the United States under this definition; all tributaries of waters identified in this definition; all wetlands adjacent to waters identified in this definition; and any waters within the federal definition of "Waters of the United States" at 40 CFR § 122.2; but not including any waste treatment systems, treatment ponds, or lagoons designed to meet the requirements of the federal Clean Water Act.

Wetland shall mean an area that is inundated or saturated by surface or groundwater at a frequency and duration sufficient to support, and that under normal circumstances does support, a prevalence of vegetation typically adapted for life in saturated soil conditions. Wetlands generally include swamps, marshes, bogs, and similar areas.

Section 31-2. Administration.

The City Manager or an authorized representative is authorized to administer, implement, and enforce the provisions of this Chapter.

[Sections 31-3 through 31-9 reserved]

ARTICLE II. STORM WATER DISCHARGES GENERALLY

Section 31-10. Discharge to MS4 prohibited.

(a) A person commits an offense if the person introduces or causes to be introduced into the MS4, Waters of the State, or Waters of the United States, any discharge, within the corporate boundaries of the municipality, which is not composed entirely of storm water.

(b) It is an affirmative defense to any enforcement action for a violation of subsection (a) of this section that the discharge was composed entirely of one or more of the following categories of discharges:

(1) A discharge authorized by, and in full compliance with, an NPDES permit (other than the NPDES permit for discharges from the MS4);

(2) A discharge or flow resulting from firefighting activities by the Fire Department;

(3) A discharge or flow of fire protection water that does not contain oil or hazardous substances or materials that the Fire Code requires to be contained and treated prior to discharge, in

which case treatment adequate to remove harmful quantities of pollutants must have occurred prior to discharge;

(4) Agricultural storm water runoff;

(5) A discharge or flow from water line flushing or disinfection that contains no harmful quantity of total residual chlorine (TRC) or any other chemical used in line disinfection;

(6) A discharge or flow from lawn watering or landscape irrigation;

(7) A discharge or flow from a diverted stream flow or natural spring;

(8) A discharge or flow from uncontaminated pumped groundwater or rising groundwater;

(9) Uncontaminated groundwater infiltration (as defined at 40 CFR Section 35.2005(20)) to the MS4;

(10) Uncontaminated discharge or flow from a foundation drain, crawl space pump, or footing drain;

(11) A discharge or flow from a potable water source that does not contain any harmful substance or material from the cleaning or draining of a storage tank or other container;

(12) A discharge or flow from air conditioning condensation that is unmixed with water from a cooling tower, emissions scrubber, emissions filter, or any other source of pollutant;

(13) A discharge or flow from individual residential car washing or other non-commercial car washing;

(14) A discharge or flow from a *riparian habitat or wetland*;

(15) A discharge or flow from cold water (or hot water with prior permission of the City Manager or an authorized representative) used in street washing or cosmetic cleaning that is not contaminated with any soap, detergent, degreaser, solvent, emulsifier, dispersant, or any other harmful cleaning substance;

(16) Drainage from a private residential swimming pool containing no harmful quantities of chlorine or other chemicals (Drainage from swimming pool filter backwash is prohibited); or

(17) A discharge or flow of uncontaminated storm water pumped from an excavation.

(c) No affirmative defense shall be available under subsection (b) if:

(1) the discharge or flow in question has been determined by the City Manager or an authorized representative to be a source of a pollutant or pollutants to the MS4, Waters of the State, or Waters of the United States;

(2) written notice of such determination and notice to cease the discharge has been provided to the discharger; and

(3) the discharge has continued after expiration of the time given in the notice to cease the discharge.

(d) A person commits an offense if the person introduces, or causes to be introduced, into the MS4, Waters of the State, or Waters of the United States any harmful quantity of any substance.

Section 31-11. Connection of sanitary sewer prohibited.

A person commits an offense if the person connects a line conveying sewage to the MS4, Waters of the State, or Waters of the United States or allows such a connection to continue.

Section 31-12. Nuisances.

(a) An actual or threatened discharge to the MS4, Waters of the State, or Waters of the United States that violates or would violate this Article is hereby declared to be a nuisance.

(b) A line conveying sewage or designed to convey sewage that is connected to the MS4, Waters of the State, or Waters of the United States is hereby declared to be a nuisance.

Section 31-13. Emergency suspension of utility service and MS4 access.

(a) The City may, without prior notice, suspend water service, sanitary sewer service, and/or discharge access to a person discharging

to the MS4, Waters of the State, or Waters of the United States when such suspension is necessary to stop an actual or threatened discharge which:

(1) presents or may present imminent and substantial danger to the environment or to the health or welfare of persons; or

(2) presents or may present imminent and substantial danger to the MS4, Waters of the State, or Waters of the United States.

(b) When the City Manager or an authorized representative determines that City-provided water service, sanitary sewer service, and/or discharge access, needs to be suspended pursuant to subsection (a), the City Manager or an authorized representative shall submit a request to the Director of the Utility Department to suspend such service or access.

(c) Within twenty-four (24) hours, or in a reasonable time if twenty-four (24) hours is not possible, of the suspension of water service, sanitary sewer service, and/or discharge access, the City Manager or an authorized representative shall notify the violator of the suspension in person and/or send notice of such suspension by certified mail, return receipt requested. Notice shall contain an order requiring the violator to cease the illicit discharge immediately. If possible and time permits, the City Manager or an authorized representative shall also attempt to notify the violator prior to suspending service or access, so long as this prior notification process does not delay suspension of service or access, and therefore cause additional danger to the environment or to the health or welfare of persons.

(d) If the violator fails to comply with an order issued under the notice provisions of subsection (c) above, the City Manager or an authorized representative may take such steps allowed by law as the City Manager or an authorized representative deems necessary to prevent or minimize damage to the MS4, Waters of the State, or Waters of the United States, and further minimize danger to the environment or to the health or welfare of persons.

(e) The City shall not reinstate suspended services or discharge access to the violator until:

(1) The violator presents proof, satisfactory to the City Manager, that the non-complying discharge has been eliminated and its cause determined and corrected;

(2) The violator pays the City for all costs the City incurred in responding to abating, and remediating the discharge or threatened discharge; and

(3) The violator pays the City for all costs the City will incur in reinstating service or access.

(f) Any violator whose service or access has been suspended or disconnected by order of the City Manager or an authorized representative may petition the City Manager for reconsideration. Such petition must be made by filing notice of such reconsideration with the City Manager or an authorized representative within five (5) days of the receipt of notice of the suspension of service or access. The City Manager or an authorized representative shall hear the reconsideration request within ten (10) days from the date such request is filed. After a final decision has been made by the City Manager or an authorized representative, any violator may appeal such decision to the City Council, which shall hear the matter at a meeting of the City Council to occur not more than thirty (30) days from the date the appeal is filed. Any persons seeking to appeal as herein provided shall file a notice of appeal with the City Secretary within ten (10) days of the date a final decision on the request for reconsideration has been made by the City Manager or an authorized representative. Failure to commence a petition for reconsideration or an appeal timely shall render the decision of the City Manager or authorized representative final and binding and not subject to appeal or other proceedings. Such reconsideration and/or appeal shall not stay the enforcement of any provisions of this Chapter. The City Council, upon hearing the matter, shall consider the facts and evidence presented at the hearing and shall, upon the completion of all proceedings, enter a final and binding order that shall not be appealable to any other body or tribunal.

(g) If prior notification of the violation is given and the violator fails to cease the discharge immediately, the City may assess a lien against the property to recover its actual response costs to suspend water service, sanitary sewer service, and/or discharge access.

(h) The remedies provided by this Section are in addition to any other remedies set out in this Chapter. Exercise of any remedies provided by this Section shall not be a bar against, nor a prerequisite for, taking other action against a violator.

(i) A person commits an offense if the person reinstates water service, sanitary sewer service, and/or discharge access to a premises with terminated service and/or access, pursuant to this Section, without the prior written approval of the City Manager or an authorized representative.

Section 31-14. ***Non-emergency suspension of utility service and MS4 access.***

(a) The City may terminate the City-provided water service, sanitary sewer service, and/or discharge access to any person discharging into the MS4, the Waters of the State, or Waters of the United States, in violation of this Article, if such termination would abate or reduce the illicit discharge.

(b) The City Manager or an authorized representative shall notify a violator of the proposed termination of its water service, sanitary sewer service, and/or discharge access. Notice shall be sent to the violator in person and/or by certified mail, return receipt requested, and shall contain an order requiring the violator to cease the illicit discharge immediately. If the violator fails to comply with an order issued under the notice provisions of this subsection, the City Manager or an authorized representative may take such steps allowed by law as the City Manager or an authorized representative deems necessary to prevent or minimize damage to the MS4, Waters of the State, or Waters of the United States, and further minimize danger to the environment or to the health or welfare of persons. The violator may petition the City Manager or an authorized representative for reconsideration, and, if necessary, file an appeal to the City Council with the City Secretary, in accordance with the procedures set forth in Section 31-13(f) of this Article.

(c) The City shall not reinstate suspended services or MS4 access to the discharger until:

(1) The violator presents proof, satisfactory to the City Manager, that the noncomplying discharge has been eliminated and its cause determined and corrected;

(2) The violator pays the City for all costs the City will incur in reinstating service or access; and

(3) If applicable, the violator pays the City for all costs the City incurred in responding to, abating, and remediating the discharge or threatened discharge.

(d) The remedies provided by this Section are in addition to any other remedies set out in this Chapter. Exercise of any remedies provided by this Section shall not be a bar against, nor a prerequisite for, taking other action against a violator.

(e) A person commits an offense if the person reinstates water service, sanitary sewer service, and/or discharge access to a premises with terminated service and/or access, pursuant to this Section, without the prior written approval of the City Manager or an authorized representative.

[Sections 31-15 through 31-30 reserved]

ARTICLE III. STORM WATER DISCHARGES ASSOCIATED WITH INDUSTRIAL ACTIVITY, INCLUDING CONSTRUCTION ACTIVITY

Section 31-31. Applicability.

This Article applies to all facilities located within the corporate limits of the City that have storm water discharges associated with industrial activity, including construction activity.

Section 31-32. Access to facilities.

(a) The City Manager or an authorized representative is authorized by this Section to enter and inspect facilities subject to regulation as provided for in this Article.

(b) Facility operators shall allow the City Manager or an authorized representative ready access to all parts of the premises for the purposes of inspection, sampling, examination and copying of records that must be kept under the conditions of an NPDES or TPDES permit to discharge storm water, and the performance of any additional duties as defined by state and federal law.

(c) The City Manager or an authorized representative shall have the right to set up, on any permitted facility, such devices as are necessary in the opinion of the City Manager or an authorized representative to conduct monitoring and/or sampling of the facility's storm water discharge.

(d) Any temporary or permanent obstruction to safe and easy access to the facility to be inspected and/or sampled shall be promptly removed by the operator at the written or oral request of the City Manager or an authorized representative and shall not be replaced. The costs of clearing such access shall be borne by the operator.

(e) Unreasonable delays in allowing the City Manager or an authorized representative access to a permitted facility are a violation of a storm water discharge permit and of this Article. A person who is the operator of a facility with a NPDES or TPDES permit to discharge storm

water associated with industrial activity commits an offense if the person denies the City Manager or an authorized representative reasonable access to the permitted facility for the purpose of conducting any activity authorized or required by this Article.

Section 31-33. Unpermitted discharges prohibited

A person who is the operator of a facility commits an offense if the person discharges, or causes to be discharged, storm water associated with industrial activity without first having obtained a NPDES or TPDES permit for such discharge.

Section 31-34. Submission of NOI to City.

(a) The operator of a facility, including construction sites, required to have a NPDES or TPDES permit to discharge storm water associated with industrial activity, shall submit a copy of the NOI to the City Manager or an authorized representative at the same time the operator submits the original NOI to the EPA or the TCEQ, as applicable.

(b) The copy of the NOI must be delivered to the City Manager or an authorized representative, either in person or by mailing it to:

City of Rosenberg
2220 4th Street
Rosenberg, Texas 77471
Attn: City Manager (or identify an authorized representative)

Any NOI mailed to the address stated above must have "**Notice of Intent to Discharge Storm Water Associated with Industrial Activity**" clearly marked on the exterior of the envelope or package.

(c) A person commits an offense if the person operates a facility that is discharging storm water associated with industrial activity without having submitted a copy of the NOI with the City Manager or an authorized representative.

Section 31-35. Compliance with permit.

(a) A facility shall be operated in strict compliance with the requirements of its NPDES or TPDES permit to discharge storm water associated with industrial activity.

(b) A person commits an offense if the person operates a facility in violation of a requirement of the facility's NPDES or TPDES permit to discharge storm water associated with industrial activity.

Section 31-36 Modification of storm water pollution prevention plans.

(a) The City Manager or an authorized representative may require any operator of a facility to modify the facility's storm water pollution prevention plan if, in the best professional judgment of the City Manager or an authorized representative, the SWPPP does not comply with the requirements of the facility's NPDES or TPDES permit to discharge storm water associated with industrial activity.

(b) The deficiencies in a facility's SWPPP will be made in writing, and the City Manager or an authorized representative will give the facility operator a reasonable amount of time, not to exceed thirty (30) days, to make the necessary changes in the SWPPP.

(c) The facility operator may petition the City Manager or an authorized representative for reconsideration of the determination of deficiencies in a facility's SWPPP, and, if necessary, file an appeal to the City Council with the City Secretary, in accordance with the procedures set forth in Section 31-13(f) of this Article."

ARTICLE IV. CONSTRUCTION SITE STORM WATER RUNOFF

Section 31-50. Applicability.

This Article, relating to the definitions and prohibitions of any construction site and associated storm water runoff, shall apply to all areas within the corporate limits of the City.

Section 31-51. Permit for land disturbance

(a) Before construction activity begins on land described below, the person owning, developing, or disturbing the land must obtain a land disturbance permit from the City:

(1) One acre or more of land; and

(2) Less than one acre of land that is part of a larger common plan of development or sale that will result in disturbance of one or more acres.

(b) The permit for land disturbance does not apply to land under active agricultural use. As soon as construction activity to the exempted land begins, the land shall lose its exemption and become subject to the provisions of this article including the requirement to obtain a land disturbance permit.

Section 31-52. Application and issuance of land disturbance permits.

(a) A completed application for a land disturbance permit must be submitted to the Building Permit office (as designee of the City Manager) on a City form. The application will require a storm water pollution prevention plan, a plan showing the person's best management practices for pollution and erosion control, and other information, including plans, that the City Manager or an authorized representative determines is reasonably necessary to administer this Article and to protect the public, public property, and waters of the state.

(b) The land disturbance permit will be issued if the application complies with the provisions of this Chapter. The permit must contain the name, address, and telephone number of the person performing the work, the location of the work, and any other information designated by the City Manager or an authorized representative. The permit may also contain special conditions the City Manager or an authorized representative determines are necessary to ensure compliance with this Article or to

protect the public, the municipal storm sewer system, or public property. It is unlawful for any person doing work under a land disturbance permit to violate any special condition or other provision of the land disturbance permit.

(c) The permit holder must keep the permit posted at a visible place at the work site and make it available for inspection upon the request of the City Manager or an authorized representative.

(d) A land disturbance permit issued under this Article is valid for the time period specified by the permit, based on the estimated time to complete the work. Upon the written request of the permit holder, the City Manager or an authorized representative may grant additional time to complete the work under the land disturbance permit.

(e) Any changes made to the storm water pollution prevention plan shall be submitted to the City for approval. Field modifications must be acknowledged by the City, in writing, before implementation.

Section 31-53. Maintenance.

The construction site must have documentation detailing the temporary and permanent maintenance of the site against storm water runoff.

Section 31-54. Inspections.

The City reserves the right to inspect any and all construction sites within the City. The operator of the construction site is obligated to allow any City inspector on site without prior notice.

Section 31-55. Responsibility of Operators

All operators with control over the construction site must:

(a) Ensure that all applicable parts of TPDES General Permit TXR150000, including any amendments, are met.

(b) Ensure that the SWPPP provided to the City indicates the areas of the project where operators have control over project specifications, including the ability to make modifications in specifications.

(c) Ensure all other operators affected by modifications in project specifications, especially those adjacent to the site or downstream, are notified in a timely manner so that those operators may modify their

BMPs as necessary to remain compliant with the conditions of TPDES General Permit TXR150000, including any amendments.

(d) Ensure that the SWPPP, for portions of the project where they are operators, indicates the name and site specific TPDES authorization numbers for permittees with the day-to-day operational control over those activities necessary to ensure compliance with the SWPPP and other permit conditions. If the operator with day-to-day operational control has not been authorized or has abandoned the site, the operator with control over project specifications is considered to be the responsible party until the authority is transferred to another party and the SWPPP is updated.

(e) Submit a copy of all paperwork submitted to regional, state, or federal authorities in relation to the storm water management plan.

(f) Ensure that all design requirements meet local, state, and federal standards.

Section 31-56. Stop work orders; revocation and appeals.

(a) If a person violates a provision of this Chapter, the City Manager or an authorized representative may issue a written stop work order to the violator directing any work or activity authorized to be done under a land disturbance permit to cease until the violation is corrected. Upon receiving a stop work order, the permit holder must immediately cause all work authorized under the land disturbance permit to stop, but may take steps necessary to secure the site. It is unlawful for any person to continue work under a land disturbance permit after receiving a stop work order or receiving notice that a stop work order has been issued or to resume the work or activity until the City Manager or an authorized representative withdraws the stop work order.

(b) The City Manager or an authorized representative may revoke a land disturbance permit for a violation of this Article. To revoke a land disturbance permit the City Manager or an authorized representative must send or deliver written notice of a violation to the permit holder ordering the violation to be corrected within a specified time. If the permit holder fails to correct the violation as directed, the City Manager or an authorized representative may revoke the permit by giving notice to the permit holder in writing.

(c) Any person may appeal the denial or revocation of a land disturbance permit, the interpretation or application of a requirement of this Article, the issuance of a stop work order or notice of violation, or

other requirement or action imposed under this Chapter by the City Manager or an authorized representative. The appeal must be submitted in writing to the City Manager within 72 hours of the action being appealed. The City Manager or an authorized representative will promptly review the facts and issue a written determination.

(d) The revocation and appeal provisions in this section govern over any other conflicting provision in the City's Code of Ordinances.

[Sections 31-57 through 31-69 reserved]

ARTICLE V. POST CONSTRUCTION STORM WATER RUNOFF

Section 31-70. Applicability.

This Article shall be applicable to all subdivision or site plan applications, unless eligible for an exemption by the City Manager or an authorized representative under the specifications of this Article. The Article also applies to land development activities that are smaller than the minimum applicability criteria if such activities are part of a larger common plan of development that meets the following applicability criteria, even though multiple separate and distinct land development activities may take place at different times on different schedules. In addition, all plans must also ensure that established water quality standards will be maintained during and after development of the site and that post construction runoff levels are consistent with any local and regional watershed plans.

(a) To prevent the adverse impacts of storm water runoff, the City shall develop performance standards to be met at new development sites. These standards apply to any construction activity disturbing one or more acres of land. The following activities may be exempt from these storm water performance criteria:

(1) Additions or modifications to existing single family structures;

(2) Developments that do not disturb more than one acre of land, provided they are not part of a larger common development plan; or

(3) Repairs to any storm water treatment practice deemed necessary by the City Manager or an authorized representative.

(b) When a site development plan is submitted that qualifies as a redevelopment project as defined in this Chapter, decisions on permitting and on-site storm water requirements shall be determined after a review by the City Manager or an authorized representative.

Section 31-71. Permit procedures and requirements.

(a) *Permit required.* No landowner or land operator shall receive any of the building, grading, land disturbance or other land development permits required for land disturbance activities without first meeting the requirements of this Chapter prior to commencing the proposed activity.

(b) *Application requirements.* Unless specifically excluded by this Article, any landowner or land operator desiring a permit for a land disturbance activity shall submit to the City Manager or an authorized representative a permit application on a form provided for that purpose.

Section 31-72. Exemptions to storm water management requirements.

Exemptions for providing storm water management are as follows:

(a) Every applicant shall provide for storm water management as required by this Chapter, unless a written request is filed to waive this requirement. Requests to waive the storm water management plan requirements shall be submitted to the City Manager or an authorized representative for approval.

(b) The minimum requirements for storm water management may be waived in whole or in part upon written request of the applicant, provided that at least one of the following conditions applies:

(1) It can be demonstrated that the proposed development is not likely to impair attainment of the objectives of this Article;

(2) Alternative minimum requirements for on-site management of storm water discharges have been established in a storm water management plan that has been approved by the City Manager or an authorized representative and the implementation of the plan is required by local ordinance;

(3) Provisions are made to manage storm water by an off-site facility. The off-site facility is required to be in place, to be designed and adequately sized to provide a level of storm water control that is equal to or greater than that which would be afforded by on-site practices and there is a legally obligated entity responsible for long term operation and maintenance of the storm water practice; or

(4) Nonstructural practices will be used on the site to reduce: a) the generation of storm water from the site, b) the size and cost of storm water storage and c) the pollutants generated at the site. These nonstructural practices will be explained in detail in the storm water design manual and the amount of credit available for using such practices shall be determined by the City Manager or an authorized representative.

(c) In instances where one of the conditions above applies, the City Manager or an authorized representative may grant a waiver from strict compliance with these storm water management provisions, as long as acceptable mitigation measures are provided. However, to be eligible for a variance, the applicant must demonstrate to the satisfaction of the City Manager or an authorized representative that the variance will not result in the following impacts to downstream waterways:

(1) Deterioration of existing culverts, bridges, and other structures;

(2) Degradation of biological functions or habitat;

(3) Accelerated stream bank or streambed erosion or silting; or

(4) Increased threat of flood damage to public health, life, property.

[Sections 31-72 through 31-79 reserved]

Section 2. Any person who shall intentionally, knowingly, recklessly, or with criminal negligence violate any provision of this Ordinance shall be deemed guilty of a misdemeanor and, upon conviction, shall be fined in an amount as provided in Section 1-13 of this Code. Each day of violation shall constitute a separate offense.

Section 3. All ordinances or parts of ordinances inconsistent or in conflict herewith are, to the extent of such inconsistency or conflict, hereby repealed.

Section 4. In the event any clause phrase, provision, sentence, or part of this Ordinance or the application of the same to any person or circumstances shall for any reason be adjudged invalid or held unconstitutional by a court of competent jurisdiction, it shall not affect, impair, or invalidate this Ordinance as a whole or any part or provision hereof other than the part declared to be invalid or unconstitutional; and the City Council of the City of Rosenberg, Texas, declares that it would have passed each and every part of the same notwithstanding the omission of any such part thus declared to be invalid or unconstitutional, whether there be one or more parts.

PASSED AND APPROVED by a vote of 6 "ayes" in favor and 0 "noes" against on this first and final reading in full compliance with the provisions of Section 3.10 of the Charter of the City of Rosenberg on the 19th day of July, 2011.

ATTEST:

CITY OF ROSENBERG ROSENBERG, TEXAS

Linda Czyrnosek, City Secretary

APPROVED:

Vincent M. Morales, Jr. Mayor

APPROVED AS TO FORM:

Lora Jean D. Lenzsch, **City Attorney**

Appendix 3

TECHNICAL MANUAL
STORM WATER MANAGEMENT HANDBOOK
CONSTRUCTION ACTIVITIES

The City of Rosenberg has accepted "Section 4.0 Best Management Practices" of the Harris County Storm Water Management Handbook for Construction Activities, 2006 Edition, with amendments, as the Technical Manual for selected Best Management Practices (BMPs) for all construction related activities which must meet the requirements of City of Rosenberg Ordinance 2011-17. All references to "City of Houston," "Harris County," "Harris County Flood Control District," and the "Texas Department of Transportation" shall be understood to refer to the City of Rosenberg, as said references are applicable under Ordinance 2011-17.

4.0

BEST MANAGEMENT PRACTICES

BEST MANAGEMENT PRACTICES INDEX

4.0	**BEST MANAGEMENT PRACTICES**		**4-2**
	PURPOSE & LIMITATIONS		4-3
4.1	DIVERTING FLOW		4-6
	4.1.1	Dikes and Swales	4-6
	4.1.2	Downspout Extender	4-14
	4.1.3	Pipe Slope Drain	4-16
	4.1.4	Paved Flume	4-20
	4.1.5	Level Spreader	4-23
4.2	MANAGING OVERLAND FLOW		4-25
	4.2.1	Filter Fabric Fences	4-25
	4.2.2	Hay Bale Fence	4-31
	4.2.3	Brush Berm	4-34
	4.2.4	Hydro-Mulch Seeding	4-37
	4.2.5	Vegetated Sediment Filter Strips	4-38
4.3	TRAPPING SEDIMENT IN CHANNELIZED FLOW		4-42
	4.3.1	Reinforced Filter Fabric Barrier	4-42
	4.3.2	Sediment Traps	4-46
	4.3.3	Sediment Basin	4-51
	4.3.4	Sandbag Barrier	4-59
	4.3.5	Bagged Gravel Barrier	4-60
4.4	ESTABLISHING PERMANENT DRAINAGEWAYS		4-62
	4.4.1	Permanent Drainageway Considerations	4-62
	4.4.2	Sodding	4-63
	4.4.3	Grassed Waterways	4-64
	4.4.4	Reinforced Grassed Waterways	4-66
	4.4.5	Riprap	4-67
	4.4.6	Lined Waterways	4-70
4.5	PROTECTING INLETS		4-73
	4.5.1	Inlet Protection Barriers	4-73
	4.5.2	Drop Inlet Insert Basket	4-79
	4.5.3	Storm Inlet Sediment Traps	4-83
4.6	TRAPPING SEDIMENT DURING SITE DEWATERING		4-86
	4.6.1	Dewatering Settling Basins	4-86
	4.6.2	Portable Sediment Tank	4-87
	4.6.3	Sediment Sump Pit	4-89
	4.6.4	Dewatering Bag	4-91
4.7	PREVENTING TRACKING		4-93
	4.7.1	Stabilized Access Roads and Parking Areas	4-93
	4.7.2	Street Cleaning	4-96
4.8	OTHER SOURCE CONTROLS ON CONSTRUCTION SITES		4-97
	4.8.1	General Source Controls	4-97
	4.8.2	Temporary Vehicle and Equipment Fueling Area	4-100

4.0 BEST MANAGEMENT PRACTICES (BMPs)

Purpose

The purposes of this section are to:

- Describe BMPs to control pollutants on construction sites.
- Identify where the BMPs apply.
- Provide guidance on designing and implementing the BMPs.

This section primarily addresses temporary BMPs designed to control pollutants during construction. These temporary measures are generally removed from the site when they are no longer needed. In some situations, these BMPs may remain in place for years after the construction or land disturbance has ended. Additional requirements for these applications may apply.

This section is intended to provide general guidance only. Designers should use the appropriate criteria of the applicable agency and consider site-specific conditions when designing BMPs for construction projects. For example, note that side slopes of 2:1 or flatter are shown for structural controls in this handbook. Generally, BMP structural designs should include side slopes of 3:1. Side slopes of 2:1 may be acceptable for temporary structures where velocities are limited to five (5) feet per second.

This chapter includes descriptions and discussions of individual BMPs for the following:

- *Diverting flow* (Section 4.1)
- *Managing overland flow* (Section 4.2)
- *Trapping sediment in channelized flow* (Section 4.3)
- *Establishing permanent drainageways* (Section 4.4)
- *Protecting inlets* (Section 4.5)
- *Trapping sediment during site dewatering* (Section 4.6)
- *Preventing tracking* (Section 4.7)
- *Other source controls on construction projects* (Section 4.8)

For quick reference, the applications and standard symbols for BMPs presented in this section are summarized in the following table.

Limitations

This section is intended to provide general guidance in managing storm water discharges from construction sites. Technical and guidance data included have come from a number of sources. (See Appendix E.) Careful consideration must be given to selecting the most appropriate control measures based on site-specific features. Additional information from professionals, agencies, organizations, and institutions with expertise in a particular area may be required in selecting, designing, and installing the BMPs.

SUMMARY OF BEST MANAGEMENT PRACTICES (BMPs)
FOR CONSTRUCTION ACTIVITIES

BMPs		APPLICATION	SYMBOL
4.1	**DIVERTING FLOW**		
4111	Diversion Dike	Diverting overland flow to a stabilized outlet or sediment-trapping device.	DD
4112	Interceptor Dike		ID
4113	Diversion Swale		DS
4114	Interceptor Swale		IS
4115	Diversion Dike and Swale		DDS
4121	Downspout Extender	Prevents water discharged from a building's downspouts from eroding disturbed areas.	DE
4131	Pipe Slope Drain	Conveys concentrated surface runoff safely down slopes without causing erosion.	PSD
4141	Paved Flume	Conveys concentrated surface runoff safely down slopes without causing erosion. Can be left in place permanently for final stabilization of the site.	PF
4151	Level Spreader	Releases concentrated runoff from dike or swale evenly as sheet flow over a stabilized area.	LS
4.2	**MANAGING OVERLAND FLOW**		
4211	Filter Fabric Fence	Intercepts and detains small amounts of sediment from disturbed areas. Decreases the velocity of sheet flow.	FF
4212	Triangular Filter Fence	Intercepts and detains small amounts of sediment from disturbed areas. Decreases the velocity of sheet flow.	TFF
4221	Hay Bale Fence	Intercepts and detains small amounts of sediment from disturbed areas. Decreases the velocity of sheet flow.	HBF
4231	Brush Berm	Intercepts and detains small amounts of sediment from disturbed areas. Decreases the velocity of sheet flow.	BB
4241	Seeding with Mulching	Stabilizes disturbed areas to minimize erosion. Decreases the velocity of sheet flow	SM

BMPs		APPLICATION	SYMBOL
4251	Vegetated Sediment Filter Strips	Reduces storm water runoff velocity as it passes through the vegetated strip, filters sediment and coarse debris.	VFS
4.3	**TRAPPING SEDIMENT IN CHANNELIZED FLOW**		
4311	Reinforced Filter Fabric Barrier	Sediment barrier used in areas of concentrated flow.	RFB
4321 4322 4323	Stone Outlet Sediment Trap Excavated Earth Outlet Sediment Trap Embankment Earth Outlet Sediment Trap	Intercepts sediment-laden concentrated runoff and traps the sediment to protect drainageways, downstream properties and rights-of-way.	SO ST XE ST EE ST
4331 4332	Sediment Basin with Pipe Outlet Sediment Basin with Stone Outlet	Intercepts sediment-laden runoff in a waterway to reduce the amount of sediment leaving the disturbed area to protect drainage ways, properties, and rights-of-way below the sediment basin.	SB PO SB SO
4312	Sandbags	Intercepts sediment-laden storm water runoff from disturbed areas, detains sediment, and releases water as sheet flow.	SBB
4351	Bagged Gravel Barrier	Intercepts and filters sediment-laden storm water runoff from disturbed areas, detains sediment, and releases water as sheet flow.	BGB
4.4	**ESTABLISHING PERMANENT DRAINAGEWAYS**		
4421	Sodding	Stabilizes disturbed areas to minimize erosion. Decreases the velocity of sheet flow. Protects drainageway channels from erosion.	SOD
4451	Riprap	Protects soil surfaces from erosion at outlets for storm sewers, swales and dikes, drop structures and channel side slopes.	R
4.5	**PROTECTING INLETS**		
4511	Inlet Protection Barriers	Placed around storm sewer inlets to prevent sediment from entering conveyance system.	IPB
4521	Drop Inlet Insert Baskets	Placed within storm sewer inlet to prevent sediment from entering conveyance system.	DIB
4531	Storm Inlet Sediment Trap	Collects sediment around a curb inlet or yard drain to prevent sediment from entering conveyance system.	IST

BMPs		APPLICATION	SYMBOL
4.6	**TRAPPING SEDIMENT DURING SITE DEWATERING**		
4611	Dewatering Settling Basin	Detains discharge pumped from excavated areas to allow the sediment to settle out.	DSB
4621	Portable Sediment Tank	Detains discharge pumped from excavated areas to allow the sediment to settle out.	ST
4631	Sediment Sump Pit	Traps and filters sediment from water pumped from excavated areas.	SSP
4641	Dewatering Bag	Filters and collects sediment from water pumped into the bag which seeps through the bottom and sides of the bag.	DB
4.7	**PREVENT TRACKING**		
4711	Stabilized Construction Access	Reduces the amount of sediment transported into public roads.	SC
4721	Street Cleaning	Reduces sediment tracked onto roadways from construction site.	STC
4.8	**OTHER SOURCE CONTROLS ON CONSTRUCTION PROJECTS**		
4821	Temporary Vehicle and Equipment Fueling Area	Contain accidental spilling of fuel, allowing for the clean up of spill once it happens and to prevent spilled fuel from running into unprotected area	TFA

4.1 BEST MANAGEMENT PRACTICES FOR DIVERTING FLOW

Concentrated or sheet runoff flow to a disturbed area greatly increases the amount of erosion of the disturbed area and the amount of sediment carried in runoff from the disturbed area. Diverting the runoff around the disturbed area generally is an effective best management practice when the disturbed area cannot be stabilized immediately. Diverting runoff from the disturbed area also increases the practicability of controlling the pollutants from the disturbed area.

It is recommended that:

- **Channelized runoff** from adjacent areas passing through the site should be diverted around disturbed areas whenever practicable.
- **Sheetflow runoff** from adjacent areas of more than 10,000 square feet should be diverted around disturbed areas, unless the disturbed area has less than 0.2% slope.
- **Diverted runoff** should be conveyed in a manner that will not erode the conveyance and receiving channels.

Diversions may be *temporary or permanent BMPs* and include the following:

- *Dikes* and *swales* (Section 4.1.1)
- *Down spout extender* (Section 4.1.2)
- *Pipe slope drain* (Section 4.1.3)
- *Paved flume* (Section 4.1.4)
- *Level spreader* (Section 4.1.5)

4.1.1 Dikes and Swales

A. Definition

A **dike** is a temporary ridge of compacted soil located either (1) immediately above cut or fill slope (2) across disturbed areas or rights-of-way or (3) along the perimeter of the site or disturbed areas.

A **swale** is a temporary excavated drainage way located across disturbed areas or right of way or along the perimeter of the construction site.

B. Purpose

Diversion dikes and swales divert runoff around disturbed areas to a stabilized outlet where the water can be discharged without adversely impacting the receiving area or channel. Diversion dikes and swales can also be used along the perimeter of the site or disturbed area to carry sediment laden runoff to a sediment trapping facility. **Interceptor dikes and swales** are used to shorten the length of exposed slopes by intercepting runoff and diverting it to a stabilized outlet.

C. Conditions Where Practice Applies

1. Upslope of disturbed areas where erosion is likely to occur.
2. Upslope of soil piles.
3. To direct runoff from an area to a stabilized outlet, sediment trap, or sediment basin.

D. Planning Considerations

If the dike or swale is going to remain in place for longer than 14 days, it should be stabilized with temporary or permanent vegetation. The slope behind the dike or swale also is an important consideration. The dike or swale must have a positive grade to assure drainage, but if the slope is too steep, precautions must be taken to prevent erosion due to high flow velocity.

This practice is considered an economical one because it uses material available on the site and usually can be constructed with equipment used for site grading. The useful life of the practice can be extended by stabilizing the dike or swale with vegetation.

Permanent diversion dikes and swales should be planned as part of the initial site development. Design of a permanent diversion requires assessment of potential hazards in the event of failure and should be designed in accordance with existing regulatory agency design criteria. The dike or swale should be designed so as to avoid ponding and to avoid directing flows upon adjacent property.

E. Design Criteria and Requirements

Timing Diversions and outlets shall be constructed and stabilized prior to disturbing the project area.

Capacity The capacity of a permanent dike or swale should be designed in accordance with existing regulatory agency design criteria. The capacity of a temporary dike or swale shall be designed to carry the peak runoff from at least a 2-year, 24-hour frequency storm with a freeboard not less than 0.3 feet. The drainage area of a temporary dike or swale shall not exceed five (5) acres.

Cross Section: Dikes

Top width:	2 feet minimum
Height:	18 inches minimum measured vertically from upslope toe or bottom of swale
Side slopes:	2:1 or flatter

Cross Section: Swales

Bottom width:	4 feet minimum; the bottom shall be level
Depth:	1 foot minimum
Side slope:	2:1 or flatter

Grade and Velocity

The channel grades may be uniform or variable. Channel velocity should be non-erosive and may not exceed permissible velocities shown in the table below. Flow behind dikes should be limited to grades between 0.05 and 1.00 percent.

Permissible Velocities for Diversion Swales (in feet per second)

Soil Texture	Channel Vegetation			
	Bare	Poor	Fair	Good
Sand, silt, sandy loam, and silty loam	1.5	1.5	2.0	3.0
Silty clay, loam, and sandy clay loam	2.0	2.5	3.0	4.0
Clay	2.5	3.0	4.0	5.0

Spacing for Interceptor Dikes and Swales

Slope of Disturbed Area Above Interceptor	<3%	3-5%	5-10%	>10%
Maximum Distance Between Interceptors	500 ft	300 ft	200 ft	100 ft

Outlets Each diversion or interceptor dike and swale should have an adequate outlet capable of conveying runoff to a location where the discharge will not cause adverse impacts. The design elevation of the water surface in the dike or swale may not be lower than the design elevation of the water surface in the outlet at their junction when both are operating at design flow.

Stabilization

The permanent dike side slopes, ridge, and the downslope side of the berm shall be stabilized either by sodding or seeding and mulching within 14 days of final grading.

F. Inspection and Maintenance

Dikes and swales shall be inspected within 24 hours after each rainfall and daily during periods of prolonged rainfall until the vegetative cover is stabilized. Thereafter, dikes and swales should be inspected, at least once every 14 calendar days and within 24 hours of the end of a storm that is 0.5 inches or greater; or at a minimum of once every seven (7) calendar days. Repairs shall be made immediately. The life expectancy of temporary diversion dikes and swales is 18 months.

G. Corresponding Technical Specifications (Refer to Appendix C)

Item No. 4111 Diversion Dikes
Item No. 4112 Interceptor Dikes
Item No. 4113 Diversion Swales
Item No. 4114 Interceptor Swales
Item No. 4115 Diversion Dikes and Swales

DIVERSION DIKE

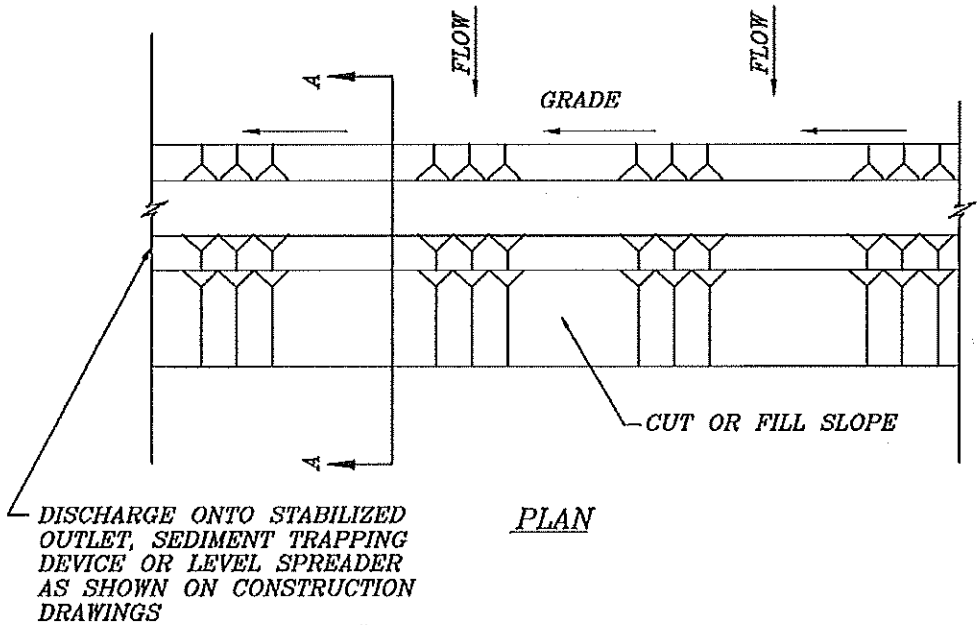

PLAN

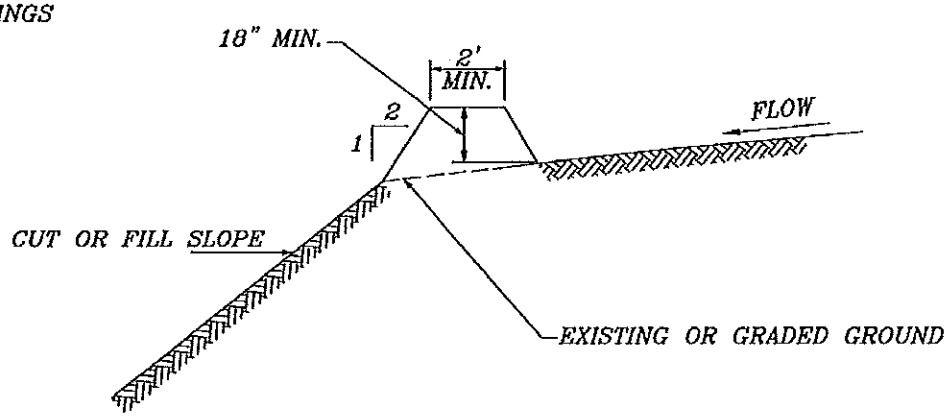

SECTION A–A

Not to Scale

General Notes:

1. Material – Machine compacted soil.
2. Height – 18 inches minimum, measured from the existing or graded ground at the upslope toe to the top of the dike.
3. Side Slopes – 2:1 or flatter.
4. Grade – As shown on the construction drawings, if not shown, provide positive drainage to point of discharge.

DD

FIGURE 4.1-1
BMP 4111
DIVERSION DIKE

INTERCEPTOR DIKE

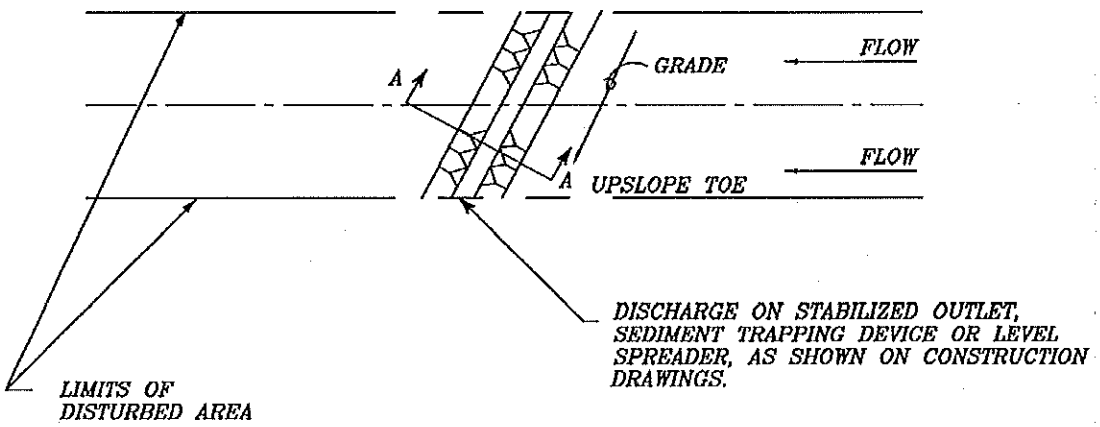

PLAN

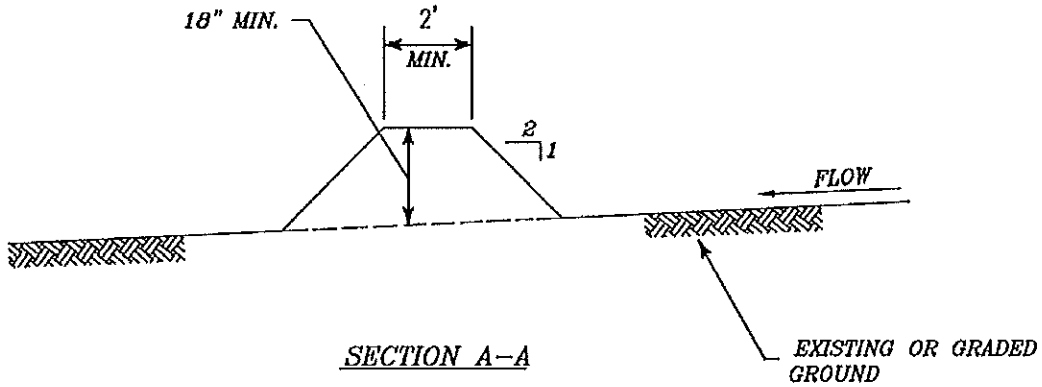

SECTION A–A

Not to Scale

General Notes:

1. Material – Machine compacted soil.
2. Height – 18 inches minimum, measured from the existing or graded ground at the upslope toe to the top of the dike.
3. Side Slopes – 2:1 or flatter.
4. Grade – As shown on the construction drawings, if not shown, provide positive drainage to point of discharge.

FIGURE 4.1-2
BMP 4112
INTERCEPTOR DIKE

DIVERSION SWALE

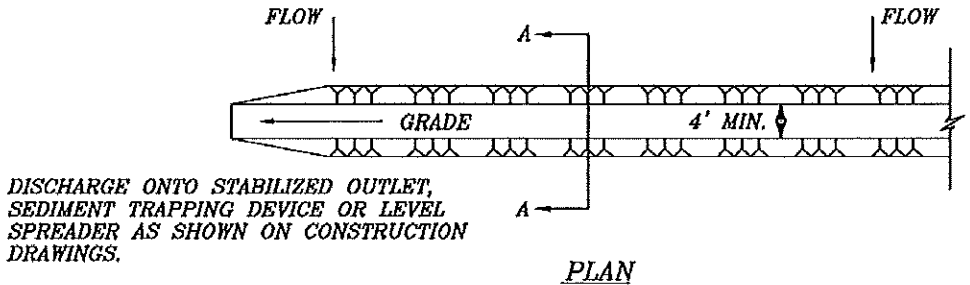

PLAN

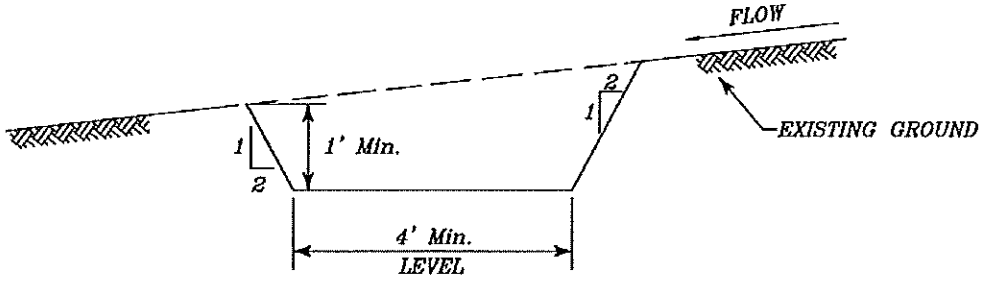

SECTION A–A

Not to Scale

General Notes:

1. Bottom Width – 4 feet minimum, constructed level.
2. Depth – 1 foot minimum.
3. Side Slopes – 2:1 or flatter.
4. Grade – As shown on the construction drawings, if not shown, provide positive drainage to point of discharge.

DS

FIGURE 4.1-3
BMP 4113
DIVERSION SWALE

INTERCEPTOR SWALE

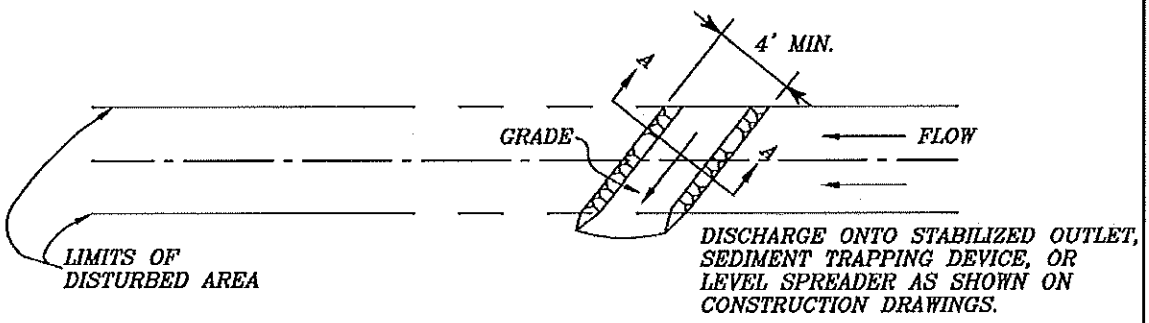

PLAN

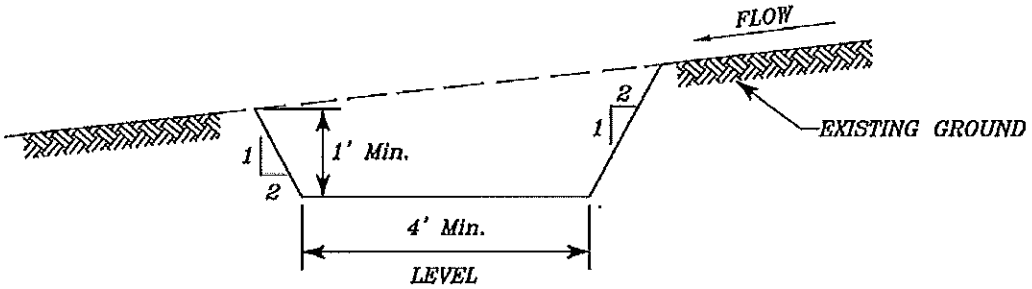

SECTION A–A

Not to Scale

General Notes:

1. Bottom Width – 4 feet minimum, constructed level.
2. Depth – 1 foot minimum.
3. Side Slopes – 2:1 or flatter.
4. Grade – As shown on the construction drawings, if not shown, provide positive drainage to point of discharge.

IS

FIGURE 4.1-4
BMP 4114
INTERCEPTOR SWALE

DIVERSION DIKE WITH SWALE

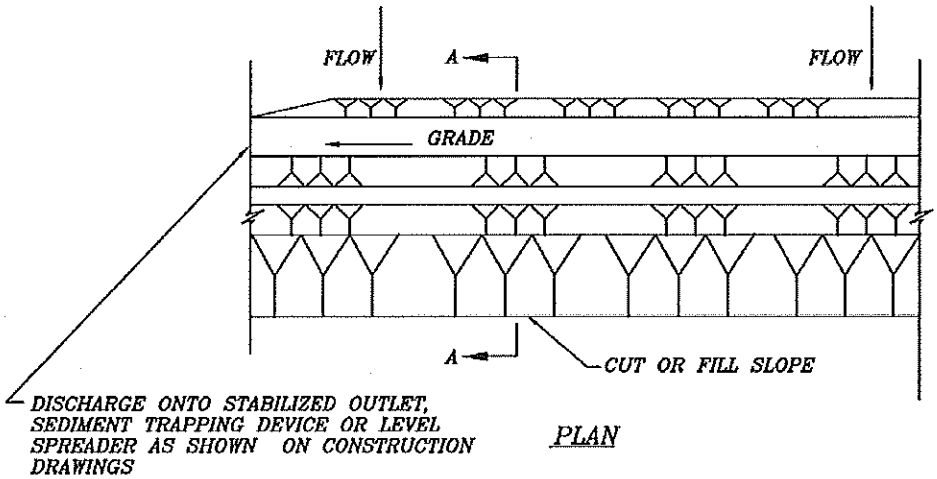

PLAN

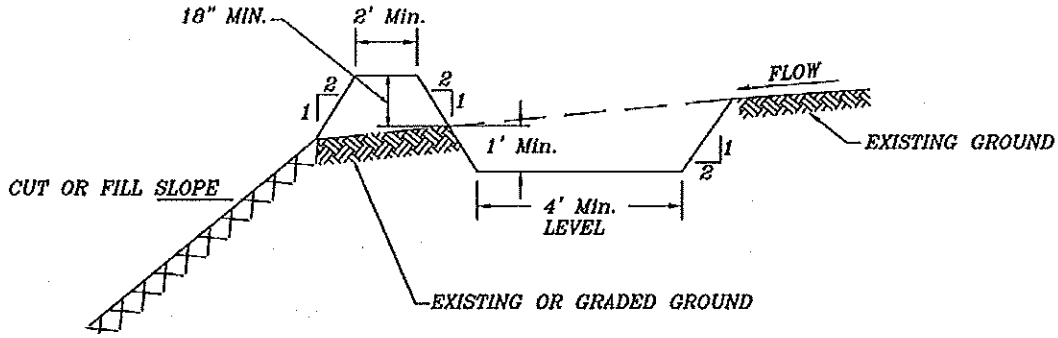

SECTION A–A

Not to Scale

General Notes:

1. Dike Material – Machine compacted soil.
2. Dike Height – 18 inches minimum, measured from the existing or graded ground at the upslope toe, to the top of the dike.
3. Side Slopes of the Dike with swale – 2:1 or flatter.
4. Grade – As shown on the construction drawings, if not shown, provide positive drainage to point of discharge.

DDS

FIGURE 4.1-5
BMP 4115
DIVERSION DIKE AND SWALE

4.1.2 Downspout Extender

A. Definition

A **downspout extender** is a temporary tube or pipe used to convey water from a building's rain downspouts to a stable area.

B. Purpose

To prevent water discharged from a building's downspouts from eroding disturbed areas.

C. Conditions Where Practice Applies

On downspouts discharging to disturbed areas.

D. Planning Considerations

Conveying water from roofs can greatly decrease the amount of water flowing across disturbed areas.

E. Design Criteria and Requirements

Timing The downspout extender shall be installed as soon as downspouts are installed.

Removal Downspout extenders may be removed only after the disturbed area is stabilized by permanent best management practices.

Materials Non-slotted, non-perforated PVC or similar plastic pipe material should be used.

F. Inspection and Maintenance

Downspout extenders shall be inspected at least once every 14 calendar days and within 24 hours of the end of a storm event of 0.5 inches or greater; or at a minimum of once every seven (7) calendar days. Repair or replacement should be made immediately.

G. Corresponding Technical Specifications (Refer to Appendix C)

Item No. 4121 Downspout Extender

DOWNSPOUT EXTENDER

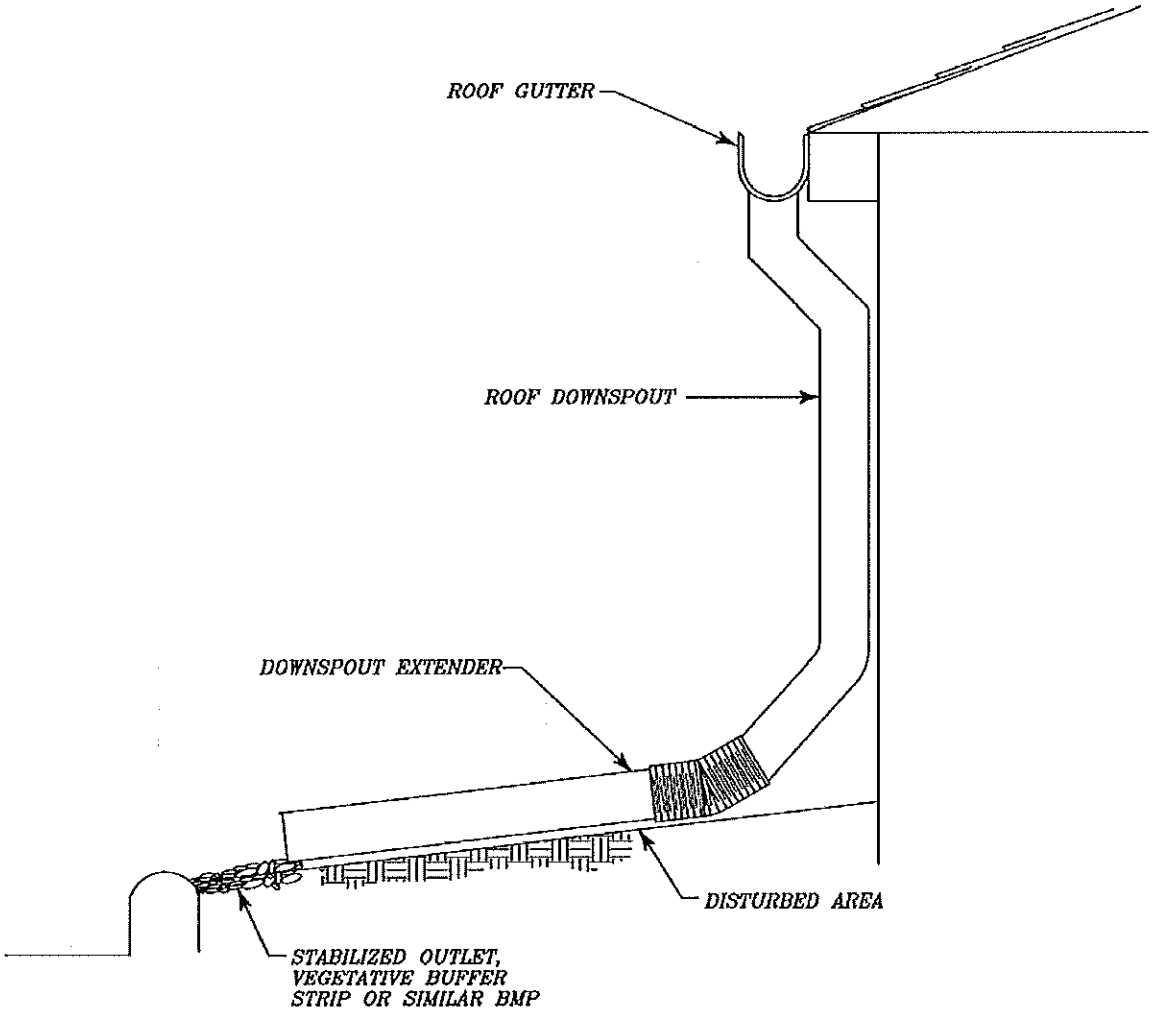

Not to Scale

DE

FIGURE 4.1-6
BMP 4121
DOWNSPOUT EXTENDER

4.1.3 Pipe Slope Drain

A. Definition

A **pipe slope drain** is a rigid pipe with a prefabricated entrance temporarily placed to extend from the top of a slope to the bottom of a slope.

B. Purpose

The purpose of a pipe slope drain is to convey surface runoff safely down slopes without causing erosion.

C. Conditions Where Practice Applies

Pipe slope drains are to be used where concentrated flow of surface runoff must be conveyed down a slope in order to prevent erosion. Recommended maximum drainage area is five (5) acres.

D. Planning Considerations

A pipe slope drain should only be used temporarily. For permanent applications, a paved flume (Section 4.1.4) may be used.

E. Design Criteria and Requirements

Dimensions Unless otherwise specified, pipe slope drains are to be sized as follows:

Pipe Diameter, Inches	Maximum Drainage Area, Acres
12	0.5
15	1.0
18	1.5
21	2.5
24	3.5
30	5.0

Inlet The height of the earth dike at the entrance to the pipe slope drain should be equal to, or greater than, the diameter of the pipe (D) plus 12 inches. Provide a flared entrance section (See Figure 4.1-7b).

Outlet The pipe slope drain should outlet onto a riprap apron, a stabilized area, or into a stabilized watercourse. A sediment trapping device should be used to trap sediment from any sediment-laden water conveyed by the pipe slope drain. A level spreader should be used if flow is to be discharged onto stabilized areas.

F. Inspection and Maintenance

Slope drains should be inspected at least once every 14 calendar days and within 24 hours of the end of a storm event of 0.5 inches or greater; or at a minimum of once every seven (7) calendar days. Damaged sections should be repaired. Riprap or stabilization at the outlet should be replaced as needed. Sediment in the stabilized outlet should be removed when accumulated to a depth of one-half the pipe diameter or one foot, whichever is less.

G. Corresponding Technical Specification (Refer to Appendix C)

Item No. 4131 Pipe Slope Drain

PIPE SLOPE DRAIN

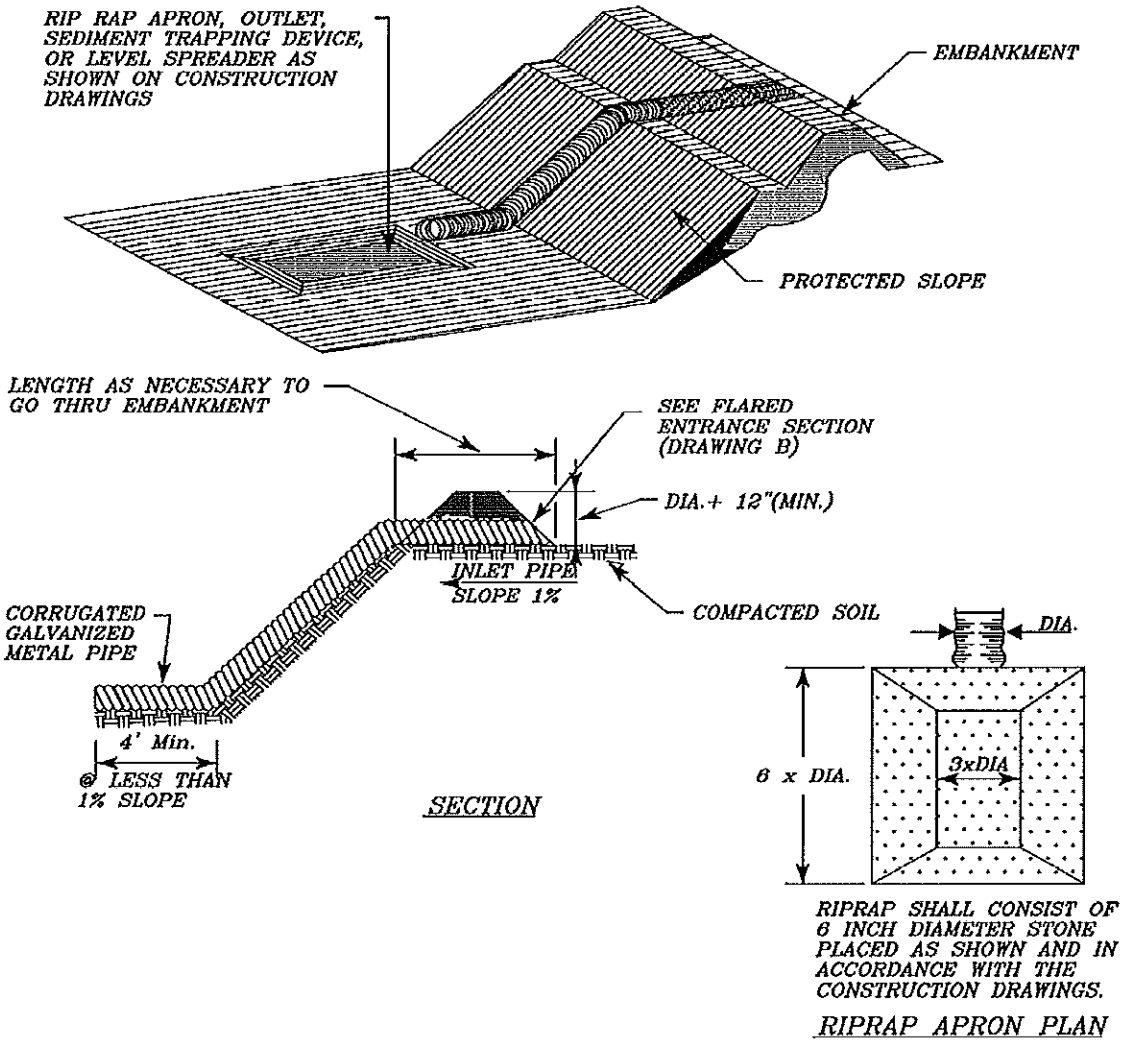

Not to Scale

General Notes:

1. The inlet pipe shall have a slope of 1 percent or greater. Pipe diameter shall be as indicated on the construction drawings.
2. The top of embankment shall be at least 1-foot higher at all points than the top of the inlet pipe.
3. Unless otherwise specified, the pipe shall be corrugated galvanized metal pipe with watertight connection bands.
4. Pipe shall be secured with hold-down grommets spaced 10-feet on centers.
5. Depth of riprap apron shall be equal to the pipe diameter with 2:1 side slopes and placed in minimum 12 inch thick lifts.

PSD

FIGURE 4.1-7a
BMP 4131
PIPE SLOPE DRAIN (DRAWING A)

PIPE SLOPE DRAIN
FLARED ENTRANCE SECTION

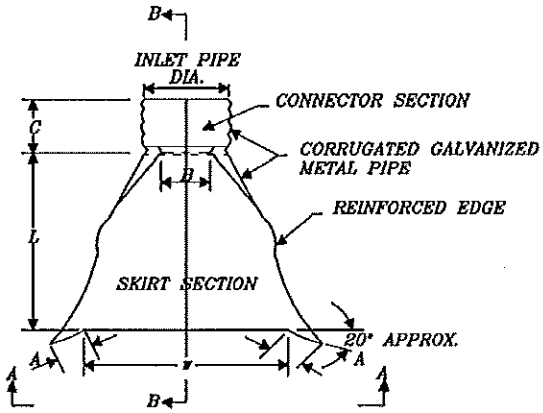

PLAN

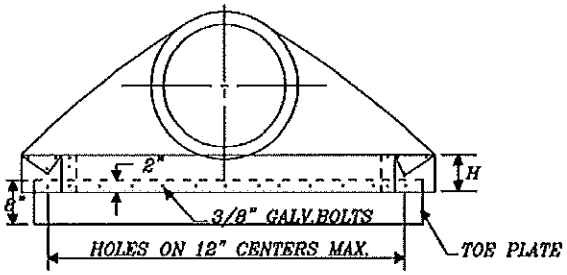

SECTION A–A

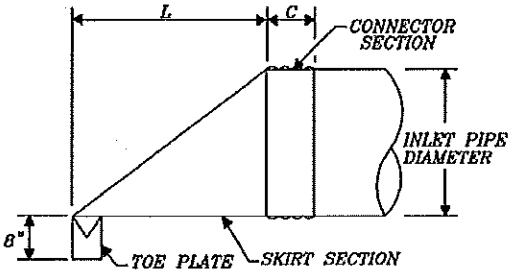

SECTION B–B

PIPE DIA.	SHEET THICK-NESS	DIMENSIONS (WITH TOLERANCE OR MAXIMUM ALLOWED DIMENSION INDICATED)					
		A 1"TOL	B MAX.	H 1"TOL	L 1 1/2"TOL	W 3"TOL	C
12"	0.064"	6"	6"	6"	21"	24"	24"
15"	0.064"	7"	8"	6"	28"	30"	24"
18"	0.064"	8"	10"	6"	31"	36"	24"
21"	0.064"	9"	12"	6"	36"	42"	24"
24"	0.064"	10"	13"	6"	41"	48"	24"
30"	0.079"	12"	16"	8"	51"	60"	24"

Not to Scale

General Notes:

1. Flared entrance section to be used with pipe slope drain.
2. Length of toe plate shall be W + 10" for 12" to 30" pipe and W + 22" for 36" to 60" pipe. Toe plate shall be galvanized metal pipe with same thickness as pipe.

PSD

FIGURE 4.1-7b
BMP 4131 (CONT.)
FLARED ENTRANCE SECTION FOR PIPE SLOPE DRAIN (DRAWING B)

4.1.4 Paved Flume

A. Definition

A **paved flume** is a channel lined with bituminous concrete, Portland cement concrete, or comparable nonerodible material placed to extend from the top of a slope to the bottom of a slope.

B. Purpose

The purpose of the paved chute or flume is to convey surface runoff safely down slopes without causing erosion.

C. Conditions Where Practice Applies

A paved chute or flume is to be used where concentrated flow of surface runoff must be conveyed down a slope in order to prevent erosion. The maximum allowable drainage area shall be 36 acres.

D. Planning Considerations

A paved flume may be used temporarily during construction of site improvements and/or permanently for final development of the site. If only temporary use is anticipated, a pipe slope drain may also be considered.

E. Design Criteria and Requirements

Dimensions Paved flumes are designated by size groups. These size groups are a function of certain dimensions.

Size Group A:

Height (H) of the dike at the entrance is at least 1.5 feet.

Depth (d) of the chute down the slope is at least eight (8) inches.

Length (L) of the inlet and outlet sections is five (5) feet.

Size Group B:

Height (H) of the dike at the entrance is at least two (2) feet.

Depth (d) of the chute down the slope is at least ten (10) inches.

Length (L) of the inlet and the outlet sections is six (6) feet.

The size is designated with a letter and a number, such as A-6, which denotes a Size Group A chute or flume with a six-foot (6-foot) bottom width. The selected size shall be shown on the plans.

Each size group has various bottom widths and allowable drainage as shown below:

Size	Bottom Width, b (feet)	Maximum Drainage Area (acres)
A-2	2	5
A-4	4	8
A-6	6	11
A-8	8	14
A-10	10	18
B-4	4	14
B-6	6	20
B-8	8	25
B-10	10	31
B-12	12	36

If a minimum of 75 percent of the drainage area will have a good grass or woodland cover throughout the life of the structure, the drainage areas listed above may be increased by 50 percent. If a minimum of 75 percent of the drainage area will have a good mulch cover throughout the life of the structure, the drainage areas listed above may be increased by 25 percent.

Materials A temporary paved flume may be constructed of bituminous concrete or unreinforced Portland cement concrete. Use applicable agency design criteria. A permanent paved flume should have reinforcing steel and be designed to conform with the applicable agency criteria.

Outlet When a paved chute or flume is used, the velocity at its outfall should be checked for erosion potential downstream. When required, energy dissipation structures should be installed.

F. Inspection and Maintenance

Inspect paved flumes at least once every 14 calendar days and within 24 hours of the end of a storm event of 0.5 inches or greater; or at a minimum of once every seven (7) calendar days. Repair damaged sections. Redress and replace stone or riprap at the outlet as needed. Remove sediment from the stabilized outlet when sediment has accumulated to a depth of one (1) foot.

G. Corresponding Technical Specifications (Refer to Appendix C)

Item No. 4141 Paved Flume

PAVED FLUME

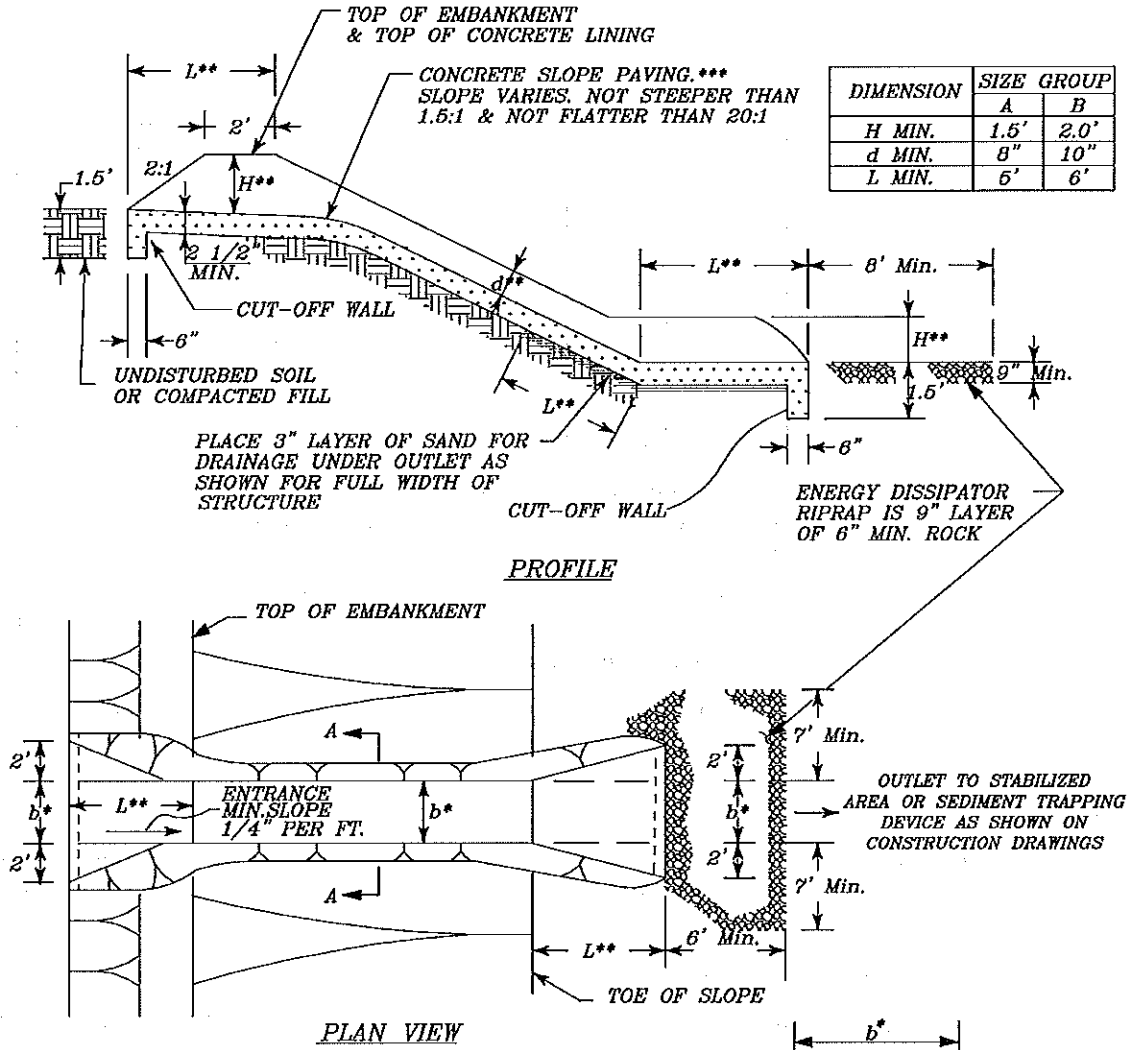

DIMENSION	SIZE GROUP	
	A	B
H MIN.	1.5'	2.0'
d MIN.	8"	10"
L MIN.	5'	6'

* DIMENSION b IS SPECIFIED BY THE NUMBER DESIGNATED IN SIZE GROUP SUCH AS A–6 WHICH MEANS SIZE GROUP A WITH b EQUAL 6 FEET.

** STRUCTURE DIMENSIONS SHALL BE SPECIFIED BELOW

*** TEMPORARY PAVED FLUME TO BE UNREINFORCED CONCRETE. PERMANENT PAVED FLUME MUST BE REINFORCED, AND DESIGNED TO CONFORM WITH THE LOCAL AGENCY'S DESIGN CRITERIA.

Not to scale

PF

FIGURE 4.1-8
BMP 4141
PAVED FLUME

4.1.5 Level Spreader

A. Definition

A **level spreader** is a specialized swale segment excavated on a level grade to allow uniform sheet flow to discharge onto stabilized surfaces.

B. Purpose

The purpose of the level spreader is to convert a concentrated flow of sediment-free runoff into a sheet flow and to discharge it onto areas stabilized by existing vegetation without causing erosion.

C. Conditions Where Practice Applies

The level spreader is used only in those situations where the spreader can be constructed on undisturbed soil; where the area directly below the level lip is stabilized by existing vegetation; where the drainage area above the spreader is stabilized by existing vegetation (or the runoff to be discharged is relatively sediment free); and where the water will not be reconcentrated immediately below the point of discharge.

D. Planning Considerations

Level spreader can be used to discharge runoff by diversion or interceptor dikes and swales, slope drains, and other devices conveying concentrated flows.

E. Design Criteria

1. The design criteria for level spreader shall be a maximum of one (1) cubic foot per second per foot of length, based on the peak rate of flow from a two-year (2-year) frequency rainfall event. The minimum length shall be five (5) feet. An alternate such as a stabilized outlet, grassed waterway, etc., should be considered where the length of the level spreader exceeds 20 feet.
2. Final discharge should be over the level lip onto an existing stabilized area with a complete vegetative cover sufficiently established to be erosion resistant.

F. Inspection and Maintenance

Level spreaders should be inspected at least once every 14 calendar days and within 24 hours of the end of a storm event of 0.5 inches or greater; or at a minimum of once every seven (7) calendar days. Repairs should be made immediately. Remove sediment deposits and any projections or other irregularities which will impede normal flow.

G. Corresponding Technical Specifications (Refer to Appendix C)

Item No. 4151 Level Spreader

LEVEL SPREADER

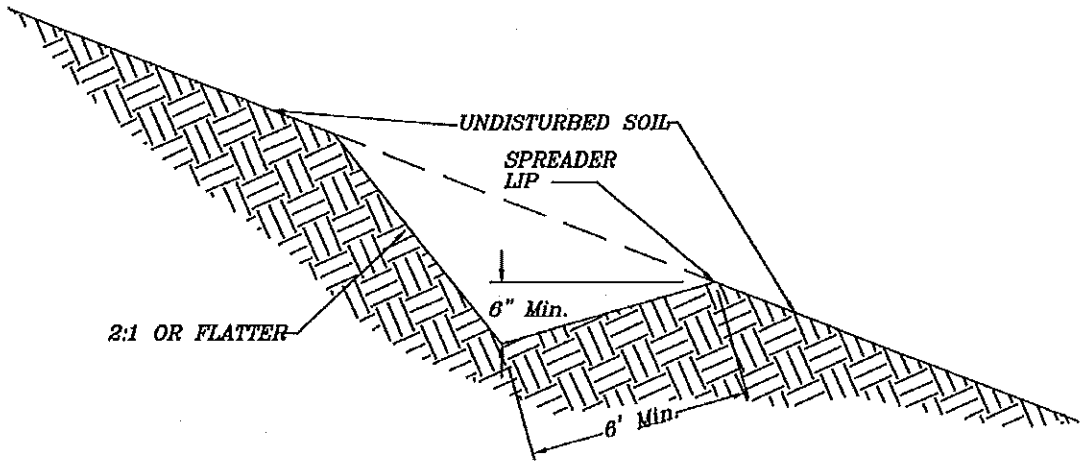

SECTION A–A

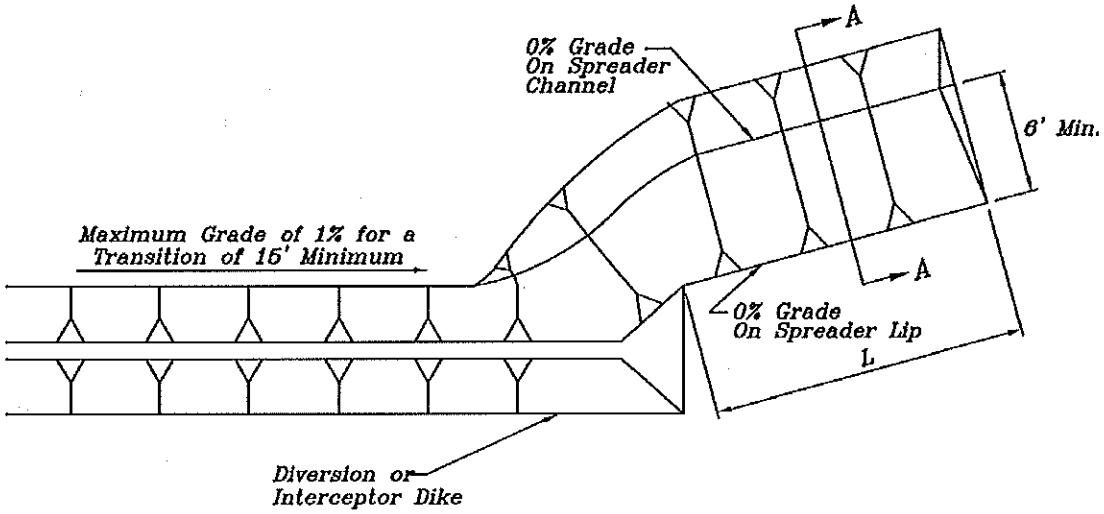

LEVEL SPREADER

Not to Scale

LS

FIGURE 4.1-9
BMP 4151
LEVEL SPREADER

4.2 BEST MANAGEMENT PRACTICES FOR MANAGING OVERLAND FLOW

Overland flow refers to *runoff flowing as a "sheet" over the land and not concentrated in runoff channels.* Generally, areas with overland flow are small in size. Best management practices usually are placed on sideslope locations.

Temporary best management practices include:

- *Filter fabric fences* (Section 4.2.1)
- *Hay bale fence* (Section 4.2.2)
- *Brush berm (Section 4.2.3)*

Filter fabric fences (Section 4.2.1) are preferred over hay bales because durability and maintenance requirements are far less desirable in hay bales.

Permanent best management practices include:

- *Seeding with mulching (Section 4.2.4)*
- *Vegetative sediment filter strip (Section 4.2.5)*
- *Sodding (Section 4.4.2)*

These best management practices are applicable to areas where overland flow occurs and where it is necessary to contain pollutants from soil storage piles. These may also be used as temporary BMPs.

It is recommended that:

- ***Filter fabric fences or equivalent best management practices be placed along all sideslope and downslope sides of sites where less than 10 acres are disturbed at one time.***
- ***At sites with less than 10 acres disturbed at one time, where a channel or area of concentrated runoff passes through the site, filter fabric fences should be placed along the channel edges to reduce the amount of sediment reaching the channel.***
- ***Filter fabric fences or equivalent best management practices should be placed around soil piles with more than 10 cubic yards of material if the soil pile will exist for more than 14 days.***
- ***Vegetative buffer strips of original undisturbed grasses or new sodding may be used along the perimeter of disturbed areas to trap sediment.***

4.2.1 Filter Fabric Fences

A. Definition

A **filter fabric fence** is a temporary sediment control fence consisting of a geotextile filter fabric stretched across and attached to supporting posts or frame and entrenched.

B. Purposes

1. To intercept and detain small amounts of sediment from disturbed areas during construction operations to prevent sediment from leaving the site.
2. To decrease the velocity of sheet flows.

C. Conditions Where Practice Applies

1. Downslope of disturbed areas where erosion is likely to occur in the form of sheet or rill erosion.
2. Around or downslope of soil piles.
3. Where the maximum size of the drainage area is 0.50 acres per 100 feet of fence length, the maximum length of slope behind the fence is 200 feet, and the maximum gradient behind the fence is 50% (2:1). The maximum slope length is as follows:

Slope (%)	Maximum Slope Length (feet)
< 0.2	200
0.2 to 0.5	175
0.5 to 1.0	140
1.0 to 2.0	100
2.0 to 5.0	75
5.0 to 10.0	50
10.0 to 20.0	25
> 20.0	15

4. Under no circumstances may filter fabric fences be used in streams, swales, ditches, or below ordinary high-water marks along streams. See Section 4.3 for BMPs for trapping sediment in channelized flow.

D. Planning Considerations

1. Under normal conditions, filter fabric fences require removal of trapped sediment. If maintenance is difficult due to location or presence of wet soils that prohibit prompt cleaning after runoff events, additional parallel fences should be constructed.
2. Filter fabrics degrade due to ultraviolet light. Consult the manufacturer's specifications for useful life.
3. Strength, permeability, and suitability for various soil textures vary with the type of filter fabric.
4. Multiple parallel fences may be needed on steep or long slopes.
5. Filter fabric fences will be more effective if runoff from areas upslope of the disturbed area is diverted around the disturbed area.
6. When installed in vehicular traffic areas, adjacent to such areas, or where vehicular traffic hazards exist (e.g. parking lots, roadways, etc.) orange filter fabric material (or another high-visibility color) should be used.

E. Design Criteria and Requirements

Timing Filter fabric fences shall be installed prior to disturbing the upslope area.

Removal Filter fabric fences may be removed once final stabilization of the disturbed area is completed.

Placement Filter fabric fences shall be placed on the contour to the extent practicable. Filter fabric fences may not be placed perpendicular to

the contour on slopes of greater than 2%. Parallel fences may be used. The parallel spacing may not exceed the slope lengths for the appropriate slope specified in Section C.3. The ends of the fence should be turned upslope 1 to 2 feet in elevation to prevent flanking.

Height 18 inches minimum height, measured from existing graded ground.

Support **Field constructed:** The full height of the filter fabric fence shall be supported by 2-inch x 2-inch wooden posts or equivalent. The posts shall be driven at least 12 inches into the ground. The maximum spacing of the posts shall be 3 feet. The filter fabric shall be stapled using at least 0.5-inch staples to the upslope side of the posts.

Factory pre-assembled: The full height of the filter fabric fence shall be supported by 2-inch x 2-inch wooden posts or equivalent. The posts shall be driven at least 12 inches into the ground. If support netting is provided, the maximum spacing of the posts should be 8 feet. If support netting is not provided, then the spacing of the posts should not exceed 3 feet.

Triangular filter fabric fence: Attach the filter fabric to the fence structure fashioned from 6 gauge, 6-inch x 6-inch wire mesh, 18 inches on each side as shown on Figure 4.2-2 (BMP 4212). The fabric cover and skirt should be continuous wrapping of filter fabric. The skirt should form a continuous extension of the fabric on the upstream side of the fence. Place overlap on bottom of filter fabric so as not to impede flow thru the triangular filter fabric fence.

The triangular filter fabric fence may be secured in place using one of the following methods:

- The skirt may be toed-in 6 inches with mechanically compacted material.
- The skirt may be weighted down with a continuous layer of 3- to 5-inch graded rock.
- The entire structure may be trenched-in 4 inches.

The triangular filter fabric fence structure and skirt, if provided, should be anchored securely in place using 6-inch wire staples on 2-foot centers on both edges and on the skirt, or staked using 18-inch by 3/8-inch diameter rebar with tee ends.

The filter fabric material should be lapped over 6 inches to cover the segment joints. The joints should be fastened with galvanized shoat rings.

Anchoring The filter fabric shall be anchored by placing at least 8 inches of the fabric in a 6-inch x 6-inch trench or in a 4-inch deep V-trench on the upslope side of the fence as shown in Figure 4.2-1 (BMP 4211). The trench shall be backfilled and compacted.

Fabric Specifications

The filter fabric shall meet the following specifications:

Grab Strength	100 lb. minimum in any principal direction (ASTM D 4632)
Apparent Opening Size (specify on construction drawings)	Between 50 and 140 for soils with more than 15% by weight passing a No. 200 sieve. Between 20 and 50 for soils with less than 15 percent by weight passing a No. 200 sieve
Water Flow Rate	40 gal/min/ft^2 at frontal area, at 50 mm constant head as determined by multiplying permittivity in sec-1 as determined by ASTM D 4491.
Ultraviolet Ray Inhibitors and Stabilizers	Should provide an expected useable life comparable to anticipated construction period. Ultraviolet stability exceeding 70% after 500 hours of exposure (ASTM D 4355). Fabric with support netting shall be reinforced with an industrial polypropylene netting with a 3/4-inch spacing or equivalent. A heavy-duty nylon top support cord or equivalent is required.

F. Inspection and Maintenance

1. Filter fabric fences shall be inspected at least once every 14 calendar days and within 24 hours of the end of a storm event of 0.5 inches or greater; or at a minimum of once every seven (7) calendar days. Repair or replacement should be made immediately.
2. Sediment deposits should be removed after each storm event and before deposits reach one-third the height of the fence.

G. Corresponding Technical Specification (Refer to Appendix C)

Item No. 4211	Filter Fabric Fence
Item No. 4212	Triangular Filter Fabric Fence

FILTER FABRIC FENCE

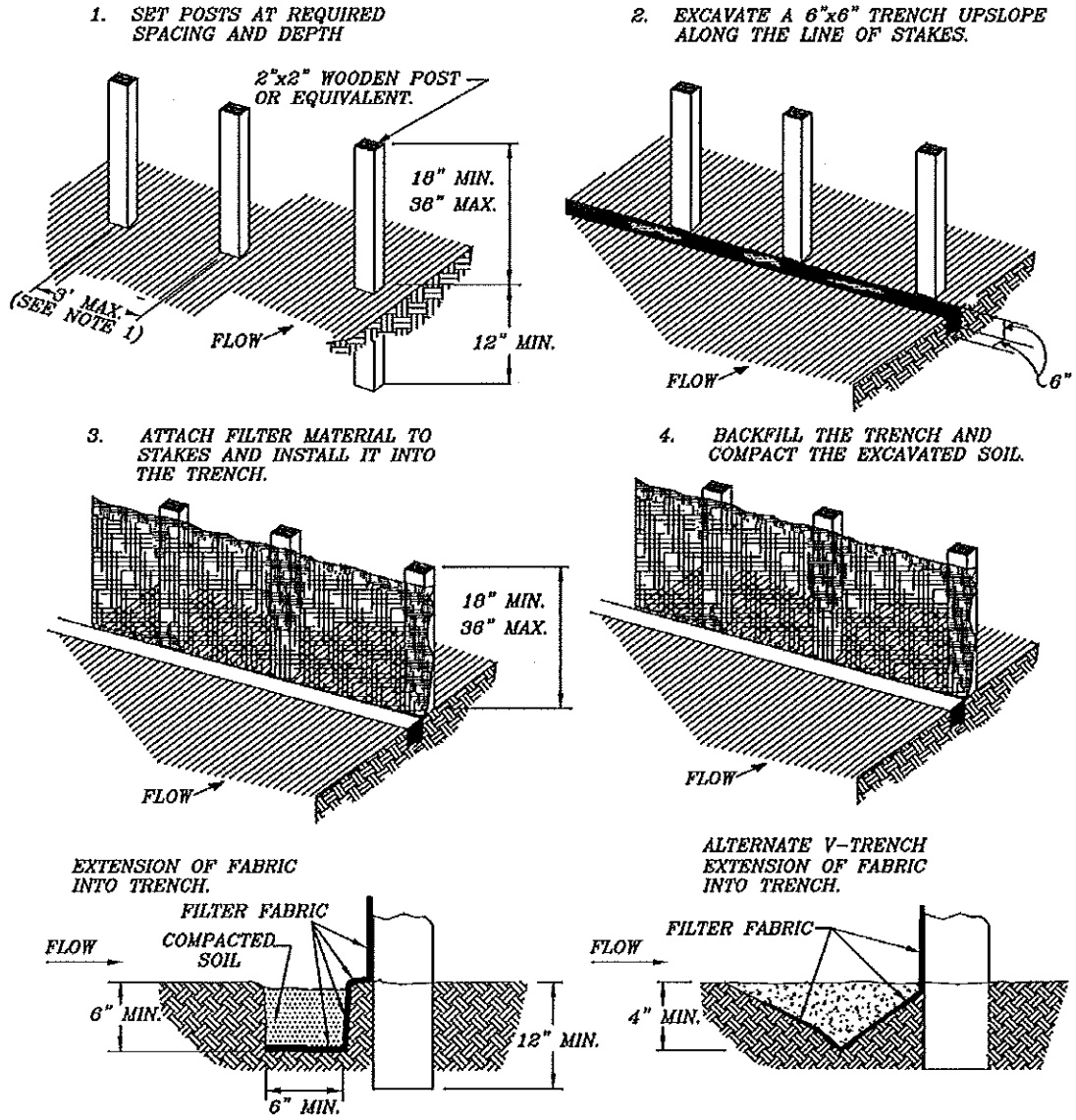

General Notes: Not to Scale

1. Posts to be set at 3-foot maximum spacing. If factory preassembled fence with support netting is used, spacing of post may be increased to 8 feet maximum.
2. When two sections of filter cloth adjoin each other they should be overlapped 6 inches at the posts, and folded.

FF

FIGURE 4.2-1
BMP 4211
FILTER FABRIC FENCE

TRIANGULAR FILTER FABRIC FENCE

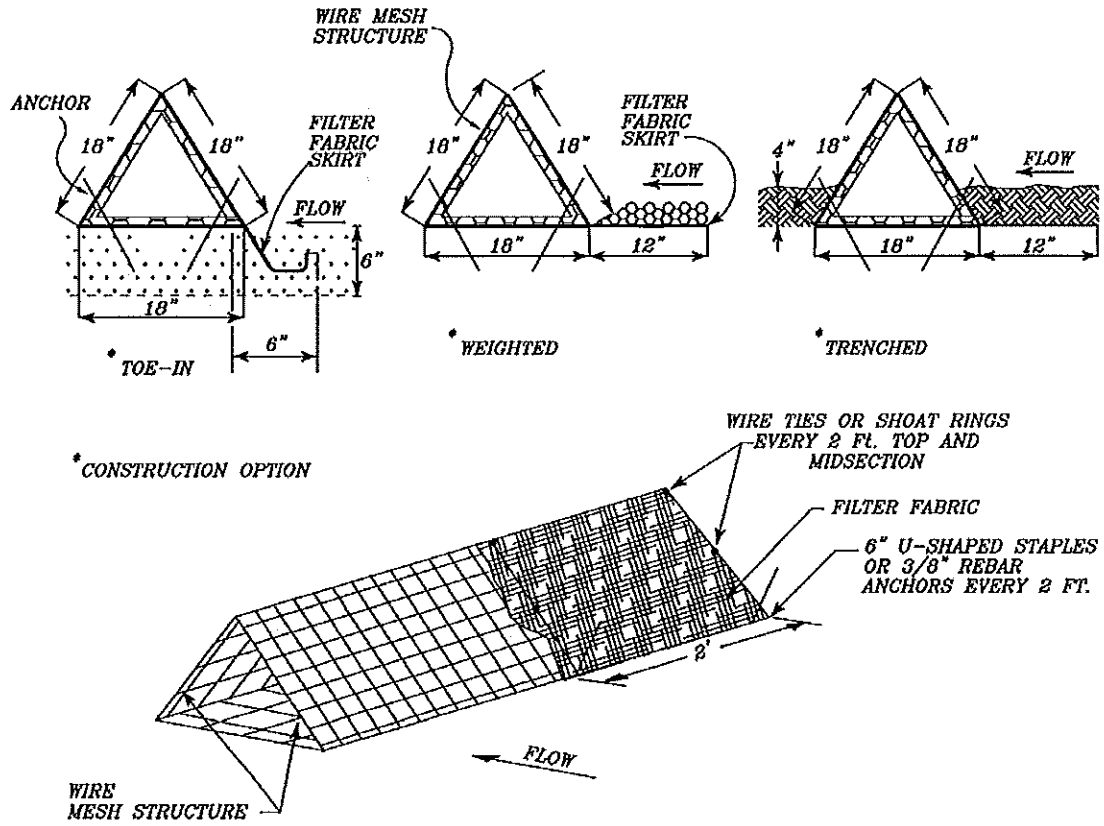

Not to Scale

General Notes:

1. Barrier shall be placed in a row with ends tightly abutting the adjacent barrier.
2. The fabric cover and skirt shall be a continuous wrapping of filter fabric. The skirt shall be a continuous extension of the fabric on the upstream side.
3. The skirt shall be weighed with a continuous layer of 3 to 5 inch open graded rock, or toed in six inches with mechanically compacted material. Otherwise the entire structure shall be trenched in 4 inches.
4. Barrier and skirt shall be securely anchored in place using 6 inch U-shaped wire staples on 2 foot center on both edges or staked using 18 inch long by 3/8 inch rebars with T-ends on same 2 foot spacing.
5. Filter material shall be lapped over ends 6 inches to cover segment joints. Joints shall be fastened with galvanized shoat rings place longitudinal overlap on bottom of triangular filter fabric fence.
6. The barrier structure shall be 6 inches by 6 inches wire mesh, 18 inches on each side of triangle.

TFF	FIGURE 4.2-2 BMP 4212 *TRIANGULAR FILTER FABRIC FENCE*

4.2.2 Hay Bale Fence

A. Definition

A **hay bale fence** is a temporary sediment barrier consisting of a row of entrenched and anchored bales.

B. Purposes

1. To intercept and detain small amounts of sediment from disturbed areas during construction operations to prevent sediment from leaving the site.
2. To decrease the velocity of sheet flows.

C. Conditions Where Practice Applies

1. Downslope of disturbed areas where erosion is likely to occur in the form of sheet or rill erosion.
2. Around or downslope of soil piles.
3. Where the maximum size of the drainage area is 0.50 acres per 100 feet of fence length; the maximum length of slope behind the fence is 200 feet; and the maximum gradient behind the fence is 50% (2:1). The maximum slope length is as follows:

Slope (%)	Maximum Slope Length (feet)
<0.2	200
0.2 to 0.5	175
0.5 to 1.0	140
1.0 to 2.0	100
2.0 to 5.0	75
5.0 to 10.0	50
10.0 to 20.0	25
> 20.0	15

4. Hay bales deteriorate with time. They should be utilized for short-term use where pollutant control is needed for less than 3 months. Hay bale fence should be replaced every two months. Filter fabric fences (Section 4.2.1) are preferred over hay bales because durability and maintenance requirements are far less desirable in hay bales.
5. Under no circumstances may hay bale fences be used in streams, swales, ditches, or below ordinary high-water marks along streams.

D. Planning Considerations

1. Under normal conditions, hay bale fences require removal of trapped sediment. If maintenance is difficult due to location or presence of wet soils that prohibit prompt cleaning after runoff events, additional parallel fences should be constructed.
2. Hay bale fences generally are considered less effective than filter fabric fences. However, they may be very useful in situations where removal of a filter fabric fence after the site is stabilized is not practicable.

3. Parallel fences may be used.
4. Hay bale fences will be more effective if runoff from areas upslope of the disturbed area is diverted around the disturbed area.

E. Design Criteria and Construction Requirements

Timing Hay bale fences shall be installed prior to disturbing the upslope area.

Removal Hay bale fences shall be removed once final stabilization of the disturbed area is completed.

Placement Hay bale fences should be placed on the contour to the extent practicable. Hay bale fences may not be placed perpendicular to the contour on slopes of greater than 2%. The ends of the hay bale fence should be turned upslope 1 to 2 feet in elevation to prevent flanking.

Entrenching The hay bale fence shall be entrenched at least 4 inches. The upslope side of the bale shall be built up an additional 4 inches. See attached drawing.

Abutting Hay bale fences shall be constructed by tightly abutting ends of adjacent bales. Gaps between bales shall be filled with hay.

Positioning All bales shall be wither-wire-bound or tied with nylon or polypropylene rope. Jute or cotton binding is not allowed. Hay bales shall be installed so that bindings are oriented around the sides rather than along the tops and bottoms of the bales to prevent degradation of the bindings.

Anchoring Each hay bale should be anchored securely by at least two stakes or rebars driven below the top of the bale and at least 18 inches into the ground. The first stake shall be driven towards the previously anchored bale to help create a tight fit. Exposed rebars should be cut flush to the bales and/or capped to protect against injuries.

F. Inspection and Maintenance

1. Hay bale fences shall be inspected at least once every 14 calendar days and within 24 hours of the end of a storm event of 0.5 inches or greater; or at a minimum of once every seven (7) calendar days. Repair or replacement should be made immediately.
2. Sediment deposits should be removed after each storm event and before deposits reach one-third the height of the fence.

G. Corresponding Technical Specification (Refer to Appendix C)

Item No. 4221 Hay Bale Fence

HAY BALE FENCE

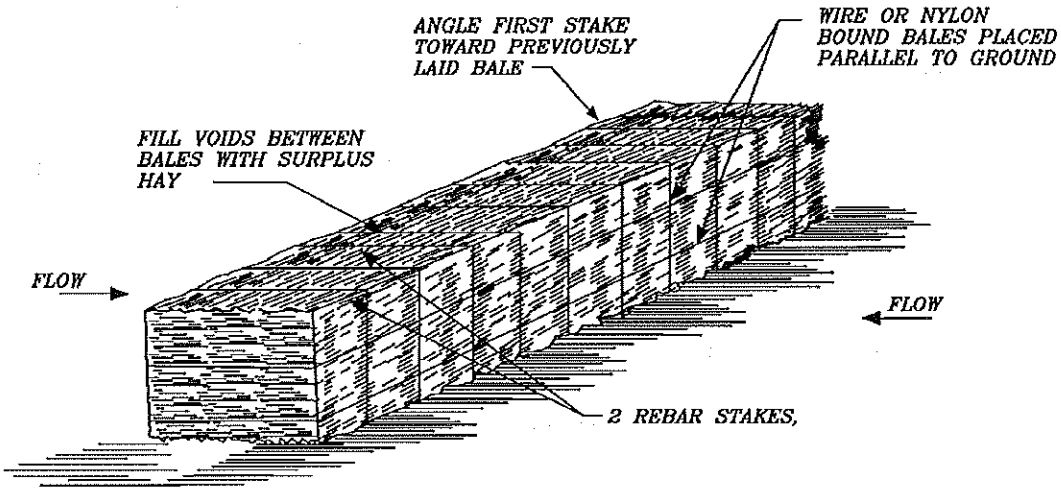

HAY BALE FENCE

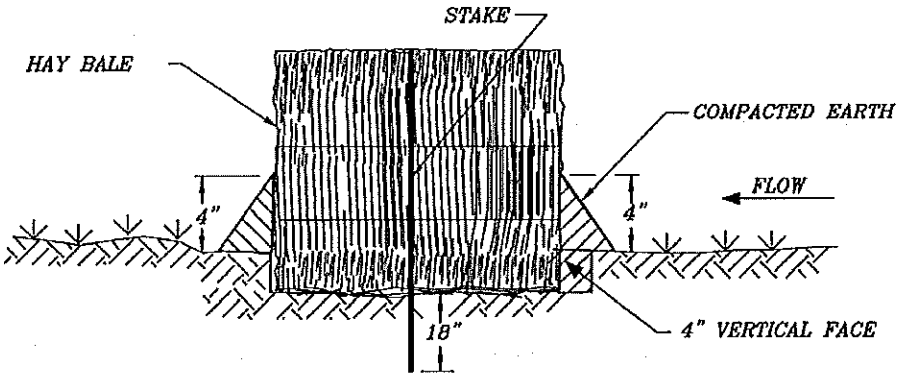

SECTION

Not to Scale

General Notes:

1. Bales shall be placed in a row with ends tightly abutting the adjacent bales. Fill the voids between bales with surplus hay. Place bales with binding parallel to ground surface.
2. Where possible each bale shall be embedded in the soil a minimum of 4 inches.
3. Bales shall be securely anchored in place by 2 #3 rebar stakes drives through the bales, a minimum of 18 inches into the ground. The first stake in each bale shall be angled towards the previous bale to force the bales together.
4. Bales shall be bound by either wire or nylon rope tied across the hay bales.
5. Replace with new hay bale fence every two months.

X-(HBF)-X

FIGURE 4.2-3
BMP 4221
HAY BALE FENCE

4.2.3 Brush Berm

A. Definition

A **brush berm** is a temporary berm constructed of hand-placed brush from woody plants installed at the toe of a slope or at the perimeter of a developing area. *Machine placement of brush berms is not permitted.*

B. Purpose

The purpose of a brush berm is to intercept sediment-laden water from disturbed areas, detain the sediment, and release the water as sheet flow.

C. Conditions Where Practice Applies

The brush berm is used where:

1. There is an adequate source of woody brush that must be removed during development.
2. There is little or no concentration of water in a channel or other drainageway above the berm, and
3. The contributing drainage area is less than two (2) acres.

D. Design Criteria and Requirements

A brush berm is constructed at the perimeter of a disturbed site within the developing area. It is not to be constructed outside the property lines without obtaining a legal easement from the affected adjacent property owners.

The following criteria shall be observed:

Drainage Area

Less than two (2) acres (recommended)

Maximum Flow Through Rate

40 gallons per minute per square foot frontal area

Height — 18 inches minimum height measured from the top of the existing ground at the upslope toe to the top of the berm.

Anchoring — Brush berms shall be secured using wire or nylon rope tied across the berm in crisscross fashion with a minimum tension of 50 pounds. The rope shall be tied securely to 18-inch, 3/8-inch diameter rebar stakes driven into the ground on four-foot (4-foot) centers on both sides of the berm.

Grade — Berms shall be built along contour lines at zero percent grade or as near as possible.

Material — Woody brush and branches, such as juniper, tallow, oak, or pine that are less than two (2) inches in diameter with dense foliage (leaves) on them. All material should be hand-placed and overlap to eliminate channelization. Care should be taken to avoid the incorporation of annual weeds and soil into the brush berm. Filter fabric may be incorporated to increase the effectiveness of sediment trapping. Wrap filter fabric around outside of bermed material before tying down.

Outlet — Runoff shall outfall directly to an undisturbed stabilized area.

E. Inspection and Maintenance

The area upstream from the brush berm should be maintained in a condition which will allow accumulated sediment to be removed following the runoff of a rainfall event. At least once every 14 calendar days and within 24 hours of the end of a storm event of 0.5 inches or greater; or at a minimum of once every 7 calendar days, inspections should be made by the responsible party. When sediment reaches a depth equal to 1/3 the height of the berm or one (1) foot, whichever is less, the accumulated sediment should be removed and disposed of at an approved site in a manner that will not contribute to additional sedimentation. The berm and its anchors should be repaired as needed to restore them to their original condition after each inspection. This may require additions to or complete replacement of the berm material, as conditions warrant.

The brush berm shall be left in place until all upstream areas are stabilized and accumulated sediment is removed. Brush shall be replaced every six (6) months or more often if loss of foliage occurs.

F. Corresponding Technical Specification (Refer to Appendix C)

Item No. 4231 Brush Berm

BRUSH BERM

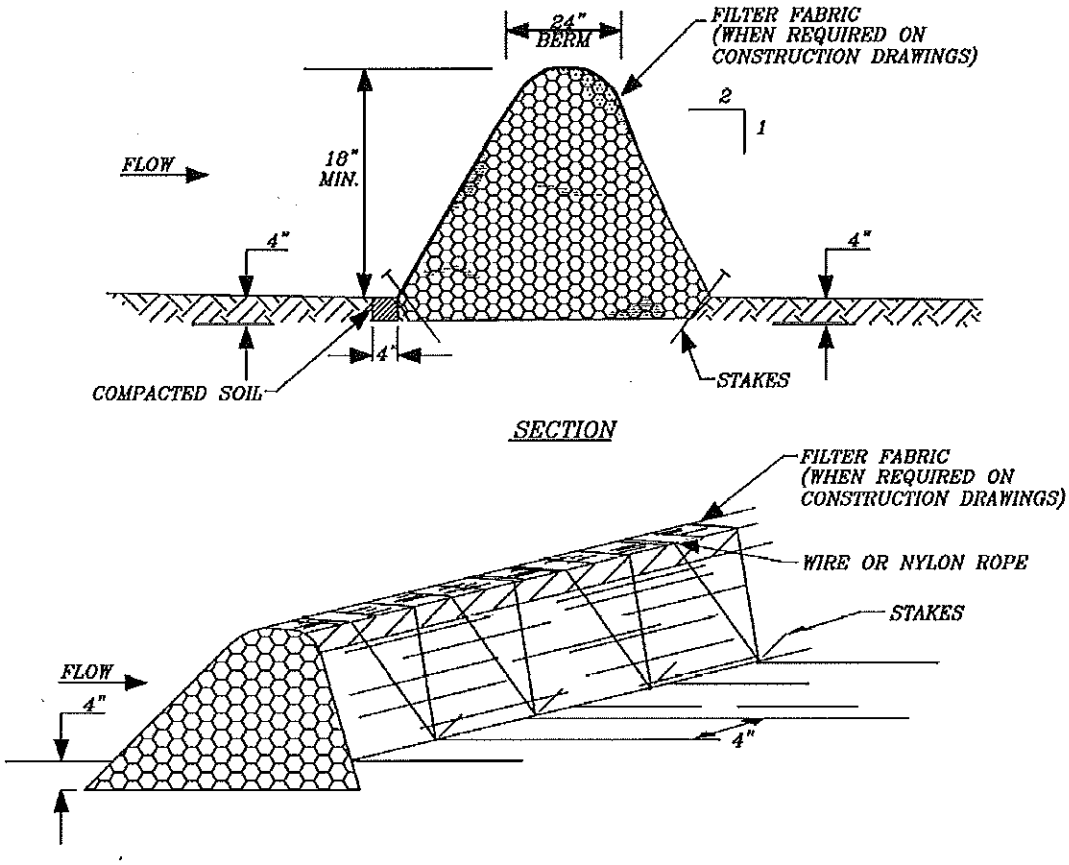

Not to Scale

General Notes:

1. Brush – Woody brush and branches having diameter less than 2 inches should be placed with a 6 inch overlap. Avoid incorporation of annual weeds and soil into brush berm.
2. Height – 18 inches minimum, measured from the top of existing ground at the upslope toe to the berm.
3. Top width – 24 inches minimum.
4. Side slope – 2:1 or flatter.
5. Brush berm shall be constructed along contour lines by hand placing. Machine placement of brush berms is not permitted.
6. The brush berm shall be embedded into the soil a minimum of 4 inches.
7. Brush berms shall be anchored using either wire or nylon rope across the berm with a minimum tension of 50 pounds.
8. The rope shall be tied securely to 18 inch x 3/8 inch diameter rebar stakes driven into the ground on 4 foot centers on both sides of the berm.
9. Maintenance shall be performed as needed.

X—(BB)—X

FIGURE 4.2-4
BMP 4231
BRUSH BERM

4.2.4 Hydro-Mulch Seeding

A. Definition

Hydro-mulch seeding is the application of an aqueous mixture of seed, water, fertilizer, mulch, and tackifier to the seedbed that can be used for establishment of temporary or permanent vegetation.

B. Purposes

To stabilize disturbed areas to minimize erosion and to reduce overland flow velocities.

C. Conditions Where Practice Applies

On exposed soils.

D. Planning Considerations

1. The effectiveness of seeding in controlling erosion is increased if drainage from upslope areas is diverted around the exposed areas.
2. Seeding should be used in conjunction with other best management practices such as filter fabric fences.
3. Seeding may not be considered as acceptable vegetative cover until the grasses are established.

E. Design Criteria and Requirements

Use the appropriate criteria of the applicable agency for specific projects. General guidance is provided below.

Seeding shall be applied within seven (7) days of the end of active disturbance of the soil surface. A proper seedbed shall be prepared before seeding. Seeding on all slopes shall be done in conjunction with hydro-mulching.

Seeds shall conform to requirements of U.S. Department of Agriculture Rules and Regulations as set forth in Federal Seed Act and Texas Seed Law. Use seed which has been treated with an approved fungicide. Container labels are to show locality and date of harvest, percent purity and percent germination, and name and type of seed. Planting date, seed type, and rate of application as follows:

SEED	RATE OF APPLICATION IN POUNDS PER ACRE (PURE LIVE SEED)	PLANTING DATE
TYPE 'A'		
Hulled Bermuda Grass	30	October 1 to April 15
Unhulled Bermuda Grass	20	
Annual Rye Grass (Gulf) or KY-31 Tall Fescue	15	
TYPE 'B'		
Hulled Bermuda Grass	60	April 15 to October 1
Foxtail Millet	15	

Fertilizer Provide fertilizer with analysis of 10 percent nitrogen, 20 percent phosphate, and 10 percent potash (10:20:10 N:P:K). Container label to show analysis. Rate of application to be 300 pounds per acre except during the periods of April 15 through June 15, when the rate will be increased to 400 pounds per acre.

Mulch Provide commercial quality wood fiber mulch consisting of wood mulch made from recovered wood materials. Rate of application to be 2,000 pounds per acre.

F. Inspection and Maintenance

All seeding is to be inspected within 24 hours after each rainfall and daily during periods of prolonged rainfall. The hydro-mulch seeding to be watered adequately until established. Once stabilized with vegetation, inspection is to be made at least once a month. Any areas damaged by erosion or do not have an acceptable vegetation should be reseeded.

G. Corresponding Technical Specification (Refer to Appendix C)

Item No. 4241 Hydro-Mulch Seeding

4.2.5 Vegetated Sediment Filter Strips

A. Definition

A **vegetated sediment filter strip** is a continuous strip of land that is either left vegetated with native plant community intact or has been temporarily planted, sodded, or seeded. A vegetated sediment filter strip is not considered stabilized unless the perennial vegetative cover is uniform (evenly distributed without large bare areas) and has a density of at least 70 percent of the natural cover of the native vegetation.

B. Purpose

To reduce storm water runoff velocity as it passes through the vegetated strip and filter out sediment and coarse debris from bare ground of construction areas.

C. Conditions Where Practice Applies

1. Construction site, where physical site conditions preclude installation of any barrier-type erosion control measures to control runoff, erosion, and sedimentation adequately.
2. Along specific internal elements of the construction area such as roads, parking areas, and around buildings.
3. Between a construction area and a critical natural area such as wildlife refuge, wetlands, and drainage corridors (rivers, bayous, streams, channels, and ditches).
4. Areas where sediment can be quickly transported from the construction site such as along existing roadways with nearby storm inlets.

D. Planning Considerations

1. The effectiveness of vegetated sediment filter strips is dependent upon their location relative to drainage flow patterns off the construction site, size of contributing drainage area, the flow velocities, and the erodibility of the soils.
2. Consider diverting drainage from upslope areas around disturbed or exposed areas.

3. Vegetated sediment filter strips shall be used in conjunction with other BMPs, such as filter fabric fences.

E. Design Criteria and Requirements

Drainage Criteria

Area 5 acres or less

Width The vegetated sediment filter strips can be either existing vegetation left undisturbed around the site or planted strips. The recommended width of the vegetated sediment filter strip can vary depending upon the size of the exposed construction site or surface area being drained, what is being protected immediately off-site, access slope, drainage patterns, and soil erodibility.

Adjacent Area	Recommended Strip Width	
	Disturbed Area 1 - 2 Acres	Disturbed Areas 3 - 5 Acres
Critical natural area	50 to 70 feet	70 to 100 feet
Drainage course	25 feet	30 to 50 feet
Roadway with storm inlets	10 feet	15 to 25 feet
Roadway with drainage ditches	10 feet	15 to 25 feet
Existing developed area	10 feet	10 feet

Seeding Temporary erosion control seeding using annual millet, annual rye, and/or covegrass seeding at 3 pounds per 1000 square feet or 35 to 40 pounds per acre of vegetated sediment filter strip area.

Plant

a. Permanent native grass / forb seed mix (see Appendix C, Item 4253, Recommended Plant Species List)
b. Plant native grass / forb sprigs
c. Plant low ground cover planting such as daylilies, lirope, and fescues.

Turf Sod Turf sod should be a last resort because of water, fertilizer, and mowing requirements and minimum amount of effective sediment control provided. The following turf sod species conserve water, drought-tolerant, and have effective rooting systems to stabilize soil: buffalo grass, bermuda grass, zoysia grass, bahia grass, crested wheat grass, native prairie grass, hard fescue, sheep fescue, tall fescue, red fescue, red top, and timothy.

Procedure

a. Do not clear the entire site at once. Leave undisturbed strips along the perimeter and where needed in the interior area to act as sediment filter. Refer to the table above for recommended strip widths.
b. Do not grade the entire site at once. Leave certain high ridges or berm area to act as containment for erosion control. See Figure 4.2-5 (BMP 4251) for recommended berm design.

c. Preserve continuous strips or larger areas as undisturbed vegetation and integrate into final project landscape.

d. Establish vegetated strip(s) prior to construction.

e. Filter strip to be continuous along construction perimeter(s) or downstream of the drainage area.

f. Establish a small berm between 8 to 12 inches high to assist vegetation in trapping sediment on the construction site.

F. Inspection and Maintenance

1. Maintain moist soil conditions immediately after seeding and/or sod installation.
2. Maintain moist soil conditions throughout vegetation establishment period.
3. Apply hay mulch, crimped in, at a rate of 200 pounds per acre.
4. Sediment deposits should be removed after each storm event.

G. Corresponding Technical Specification (Refer to Appendix C)

Item No. 4251	Turf Sod Vegetated Sediment Filter Strip
Item No. 4252	Temporary Erosion Control Seeding
Item No. 4253	Permanent Grass Matrix and Forb/Wildflower Seeding
Item No. 4254	Planting and Plant/Seeding Maintenance

VEGETATED SEDIMENT FILTER STRIPS

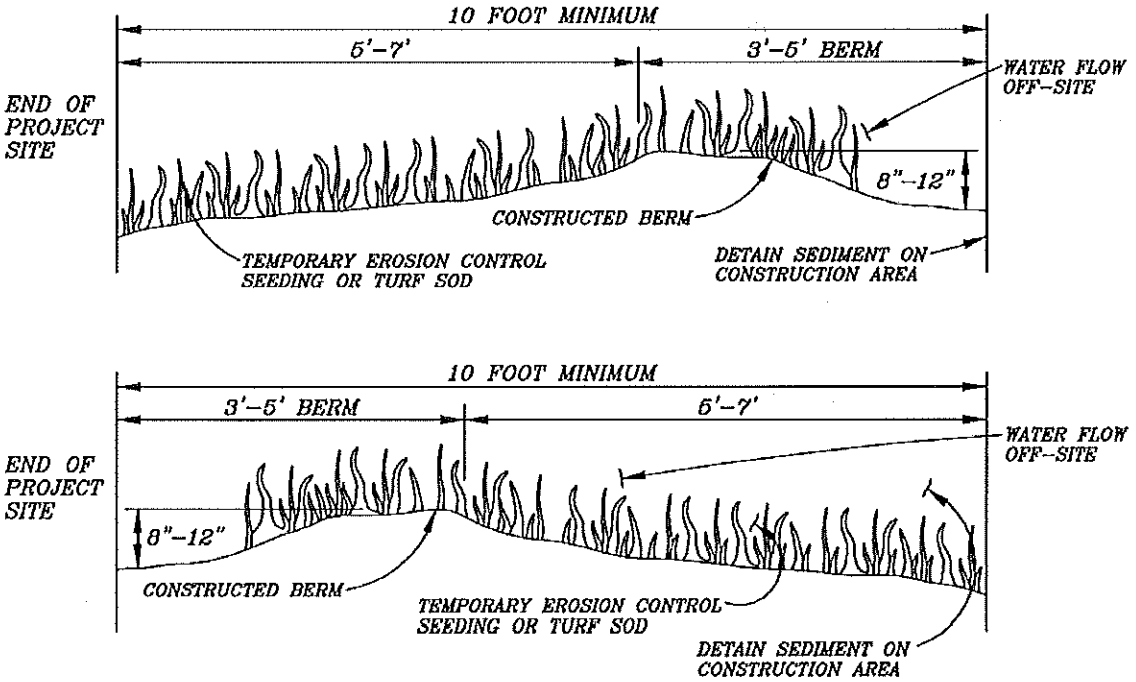

Not to Scale

VFS

FIGURE 4.2-5
BMP 4251
VEGETATED SEDIMENT FILTER STRIPS FOR TEMPORARY EROSION CONTROL

4.3 BEST MANAGEMENT PRACTICES FOR TRAPPING SEDIMENT IN CHANNELIZED FLOW

Channelized flow refers to *runoff flowing through depressions, swales or channels.* This section contains BMPs to control or trap sediment carried in channelized flow.

The practices vary by drainage area as follows:

- For drainage areas of less than 2 acres:

  Diversion dikes and swales (Section 4.1.1)
  Reinforced filter fabric barrier (Section 4.3.1)
  Sandbag barrier (Section 4.3.4)
  Bagged Gravel Barrier (Section 4.3.5)

- For drainage areas of less than 5 acres:

  Sediment traps (Section 4.3.2)

- For drainage areas of 10 or more acres:

  Sediment basin (Section 4.3.3).

4.3.1 Reinforced Filter Fabric Barrier

A. Definition

A **reinforced filter fabric barrier** is a temporary sediment barrier used in areas of concentrated flow consisting of a filter fabric stretched across and attached to supporting posts and a wire fence and toed in.

B. Purpose

To cause sediment carried in channelized or concentrated runoff to settle by reducing the flow velocity.

C. Conditions Where Practice Applies

1. Concentrated runoff can carry significant amounts of sediment. The use of reinforced filter fabric barriers should be limited to protection of Stage I inlets, unstabilized minor swales, and ditches or diversions where the maximum contributing area is no greater than 2 acres. For larger contributing areas, sediment traps or sediment basins should be used.
2. Reinforced filter fabric barriers may not be used in intermittent and perennial stream channels.

D. Planning Considerations

1. Under normal conditions, reinforced filter fabric barriers require removal of trapped sediment. If maintenance is difficult due to location or presence of wet soils that prohibit prompt cleaning after runoff events, additional parallel barriers should be constructed.
2. Filter fabrics degrade due to ultraviolet light. Consult the manufacturer's specifications for useful lifetime.
3. Woven and non-woven filter fabrics are available. Strength, permeability, and suitability for various soil textures vary with the type of fabric. Select fabric designated by the manufacturer as filter fabric with openings that are appropriate for the type of soils at the project site.

E. Design Criteria and Requirements

Installation Reinforced filter fabric barriers shall be installed:

a. prior to disturbing upslope areas, or

b. within 24 hours of constructing Stage I inlets, ditches, diversions or other channels. Stage I inlet is an incomplete inlet before the installation of inlet top. Stage II inlet is a completed inlet prior to completion of the construction.

Removal Reinforced filter fabric barriers shall remain in place and be maintained until final stabilization of disturbed upslope areas and channels, ditches, and diversions is completed.

Shape When used in swales, ditches, or diversions, the elevation of the barrier at the top of the filter fabric at the flowline location in the channel shall be lower than the bottom elevation of the filter fabric at the ends of the barrier, or the top of bank, whichever is less.

Height Reinforced filter fabric barriers shall be at least 18 inches but not more than 36 inches in height.

Support The full height of the reinforced filter fabric barrier shall be supported by 2" x 2" wooden posts or steel fence posts (min. of 1.25 lbs. per linear foot and Brinell hardness greater than 140) or equivalent and a wire fence 42 inches in height. The posts shall be driven at least 12 inches into the ground. The maximum spacing of the posts shall be 6 feet. If hot rolled steel posts are used, maximum post spacing shall be 8 feet. The wire fence shall be a minimum of 12.5 gauge galvanized 2" x 4" welded wire.

Attaching The wire mesh shall be stapled to the posts on the upslope side with heavy duty staples at least 1 inch long or with wire ties. The filter fabric should be attached to the wire mesh with wire ties.

Entrenching The filter fabric shall be anchored by placing 12 inches of the fabric in a 6-inch x 6-inch trench on the upslope side of the barrier as shown in Figure 4.3-1 (BMP 4311). The wire mesh shall extend at least 2 inches into the trench. The trench shall be backfilled and compacted.

Fabric Specifications

The filter fabric shall meet the following specifications:

Grab Strength	100 lb. minimum in any principal direction (ASTM D 4632)
Apparent Opening Size (specify on construction drawings)	Between 50 and 140 for soils with more than 15% by weight passing a No. 200 sieve Between 20 and 50 for soils with less than 15 percent by weight passing a No. 200 sieve
Water Flow Rate	40 gal/min/ft^2 along frontal areas. This will also determine permittivity (opening size).

Ultraviolet Ray Inhibitors and Stabilizers	Should provide an expected useable life comparable to anticipated construction period. Ultraviolet stability exceeding 70% after 500 hours of exposure (ASTM D 4355). Fabric with support netting shall be reinforced with an industrial polypropylene netting with a 3/4-inch spacing or equivalent. A heavy-duty nylon top support cord or equivalent is required.

Spacing The spacing between barriers shall be determined based on the drainage area and the difference in elevation. For unpaved contributing areas, the contributing drainage area to each filter fabric barrier should not exceed two (2) acres. For paved contributing areas, the contributing drainage area to each filter fabric barrier may not exceed one (1) acre. The difference in elevation between barriers should not exceed 2/3 the height of the filter fabric. (For example, a 3-foot barrier used on a 2% grade with an unpaved contributing area allows the barriers to be placed 100 feet apart provided the contributing area between the barriers does not exceed two (2) acres.)

F. Inspection and Maintenance

1. Reinforced filter fabric barriers shall be inspected at least once every 14 calendar days and within 24 hours of the end of a storm event of 0.5 inches or greater; or at a minimum of once every seven (7) calendar days. Repair or replacement shall be made immediately.
2. Sediment deposits should be removed after each storm event and when deposits reach one-third the height of the barrier.

G. Corresponding Technical Specification (Refer to Appendix C)

Item No. 4311 Reinforced Filter Fabric Barrier

REINFORCED FILTER FABRIC BARRIER

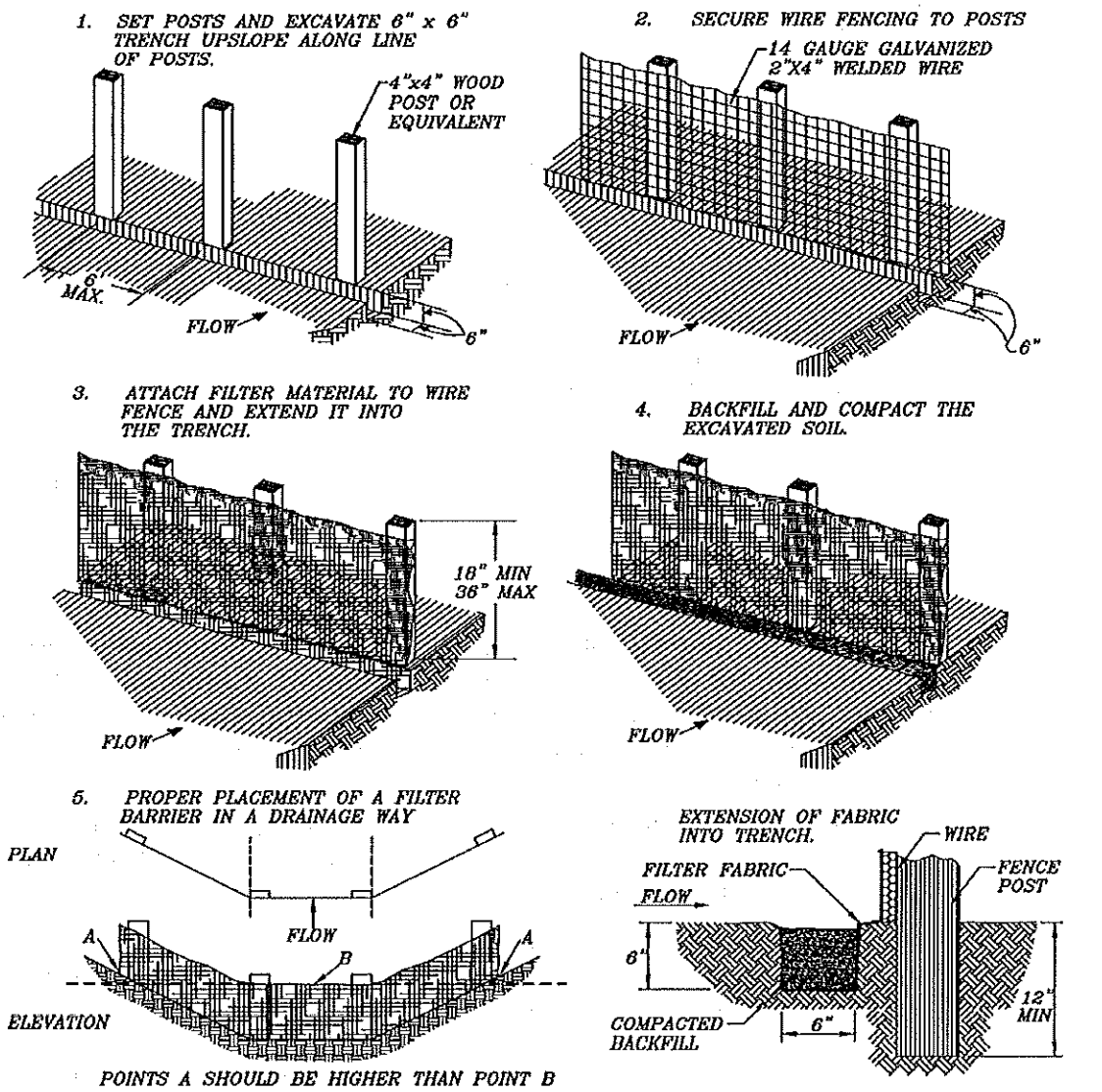

General Notes: Not to Scale

1. Woven wire fence to be fastened securely to fence posts with staples or with wires ties.
2. Filter fabric to be fastened securely to woven wire fence, with ties spaced every 24 inches at top and midsection.
3. When two section of filter fabric adjoin each other, they shall be overlapped 6 inches at the posts, and folded.
4. If hot rolled steel posts are used, maximum post spacing can be 6 feet.

RFB

FIGURE 4.3-1
BMP 4311
REINFORCED FILTER FABRIC BARRIER

4.3.2 Sediment Traps

A. Definition

A **sediment trap** is a small temporary basin formed by excavation and/or an embankment to intercept sediment-laden runoff and to trap and retain the sediment.

B. Purpose

The purpose of a sediment trap is to intercept sediment-laden runoff and trap the sediment to protect drainageways, properties, and rights-of-way below the sediment trap from sedimentation.

C. Conditions Where Practice Applies

A sediment trap usually is installed at points of discharge from disturbed areas less than 5 acres. If drainage site is larger than 5 acres, multiple sediment traps are recommended or a single large sediment basin is recommended, as appropriate. (For Sediment Basin, see Section 4.3.3).

D. Planning Considerations

The sediment trap should be located to obtain the maximum storage benefit from the terrain for ease of cleanout and disposal of the trapped sediment, and to minimize interference with construction activities.

E. Design Criteria and Requirements

It is recommended that the volume of a sediment trap as measured at the elevation of the crest of the outlet be at least 1,800 cubic feet per acre of drainage area. The trap must be large enough to allow sediment to settle and must have the capacity to store the collected sediment until it is removed. The volume of the trap shall be calculated using standard mathematical procedures.

Excavation operations should be carried out in such a manner that erosion and water pollution will be minimal. Any excavated portion of sediment trap should have 2:1 or flatter slopes. The embankment should be mechanically compacted.

Sediment traps are named according to the type of outlet. Each type has different design criteria and will be discussed separately. The outlets should be designed, constructed, and maintained in such a manner that sediment does not leave the trap and that erosion of the outlet does not occur. A trap may have several different outlets with each outlet conveying part of the flow based on the criteria below, and the combined outlet capacity shall meet that criteria.

A **stone outlet sediment trap** consists of a basin formed by an embankment or excavation and an embankment. The outlet for the trap is over a level stone section. To provide for a ponding area, a triple layer of geotextile fabric-wrapped stone core having a nominal diameter of one (1) foot shall be placed in the outlet structure. The core shall be covered by a minimum of six (6) inches of stone.

The minimum length (feet) of the stone outlet should be equal to six (6) times the drainage area (acres). The crest of the outlet (top of stone) shall be at least one (1) foot below the top of the embankment. Unless otherwise specified, all stone used should be at least three (3) inches thick and shall not exceed 1/2 cubic foot in volume (see drawing for *Stone Outlet Sediment Trap* for details).

An **excavated earth outlet sediment trap** is constructed at an opening or junction point of diversion dikes. A sedimentation area is excavated at this location to pond

runoff, to reduce its velocity, and to cause sedimentation. The crest over which runoff must flow is level with the natural ground, and its length is defined by the width of the excavation. The minimum length of the crest in feet should be equal to four (4) times the drainage area in acres.

An **embankment earth outlet sediment trap** is defined by a crest formed on a dike to allow runoff to be released at that location. The length of the crest (feet) should be equal to four (4) times the drainage area (acres). The embankment at the crest should have a top width of four (4) feet and have 2:1 side slopes. An emergency outlet in the embankment should be provided as shown in Figure 4.3-4, BMP 4323.

Each trap should be delineated on the plans in such a manner that it will not be confused with any other features. Each trap on a plan should have a number, and the numbers should be consecutive.

The following information should be shown for each trap in summary table form on the same trap drawing sheet:

- Type of trap
- Size of outlet
- Trap dimensions
- Embankment height and excavation depth
- Drainage area

F. Inspection and Maintenance

The sediment trap will be inspected once every 14 calendar days and within 24 hours of the end of a storm event of 0.5 inches or greater; or at a minimum of once every seven (7) calendar days. Repairs will be made promptly.

Sediment should be removed and the trap restored to its original dimensions when the sediment has accumulated to one-third of the design depth of the trap or one (1) foot, whichever is less. Sediment removed from the trap should be deposited in an approved spoil area and in such a manner that it will not cause additional sedimentation.

G. Corresponding Technical Specification (Refer to Appendix C)

Item No. 4321	Stone Outlet Sediment Trap
Item No. 4322	Excavated Earth Outlet Sediment Trap
Item No. 4323	Embankment Earth Outlet Sediment Trap

STORM INLET SEDIMENT TRAPS

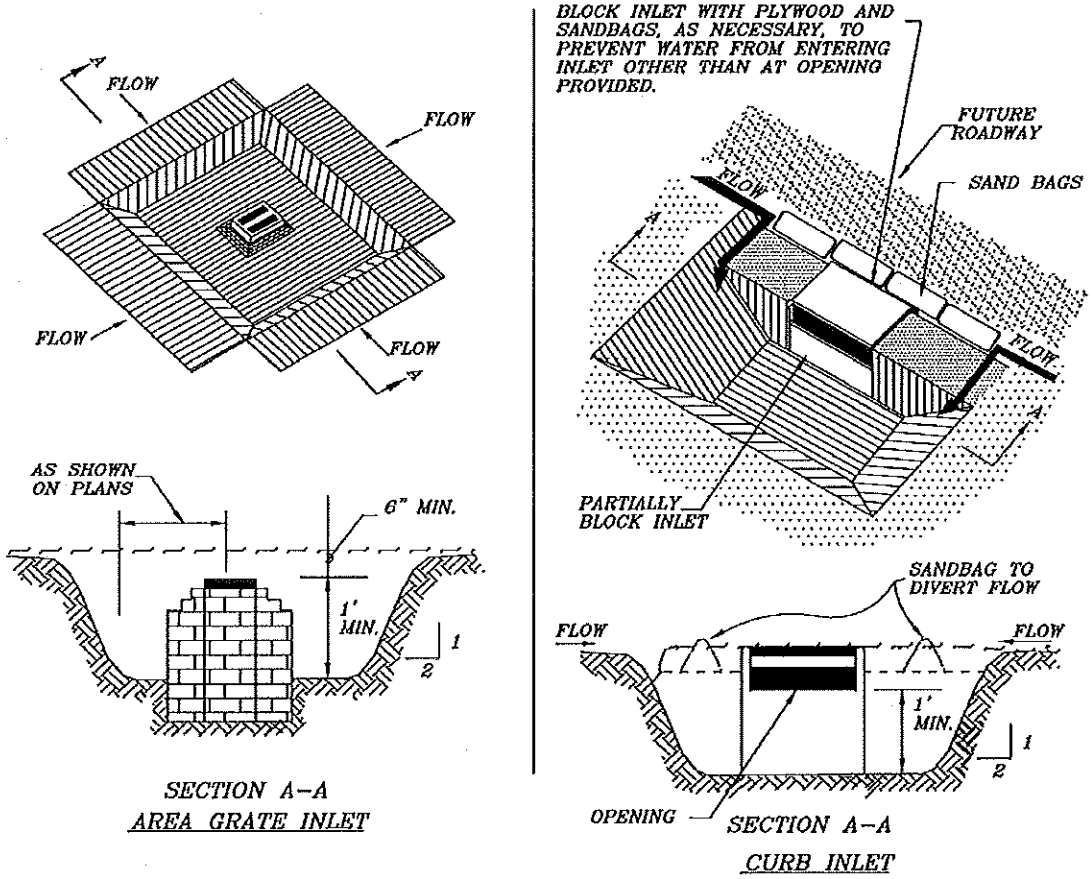

NOTE: WHERE CURB IS IN PLACE, PROVIDE A 1' WIDE OPENING IN THE CURB, OR USE A SANDBAG DAM TO FORCE WATER OVER THE CURB TO THE TRAP.

General Notes: Not to Scale

1. Rock and geotextile fabric shall be as indicated by this specification.
2. Dimension – Limit of excavation and outlet length and height shall be as indicated on the construction drawing.
3. Side slope shall be 2:1 or flatter.
4. Maintain a minimum of 6 inches between top of core material and top of stone outlet, a minimum of 4 inches between bottom of core material and existing ground and a minimum of 1 foot between top of stone outlet and top of embankment.
5. Rock shall be embedded a minimum of 4 inches into existing ground.
6. Core shall be a minimum of 1 foot in height and in width and shall be wrapped in geotextile fabric.
7. Ponding on sediment laden runoff in sediment trap accomplished by embankment or excavation depending on terrain. Reference construction drawings for trap type and dimensions.
8. Outlet into stabilized area.

SO
ST

FIGURE 4.3-2
BMP 4321
STONE OUTLET SEDIMENT TRAP

EXCAVATED EARTH OUTLET SEDIMENT TRAP

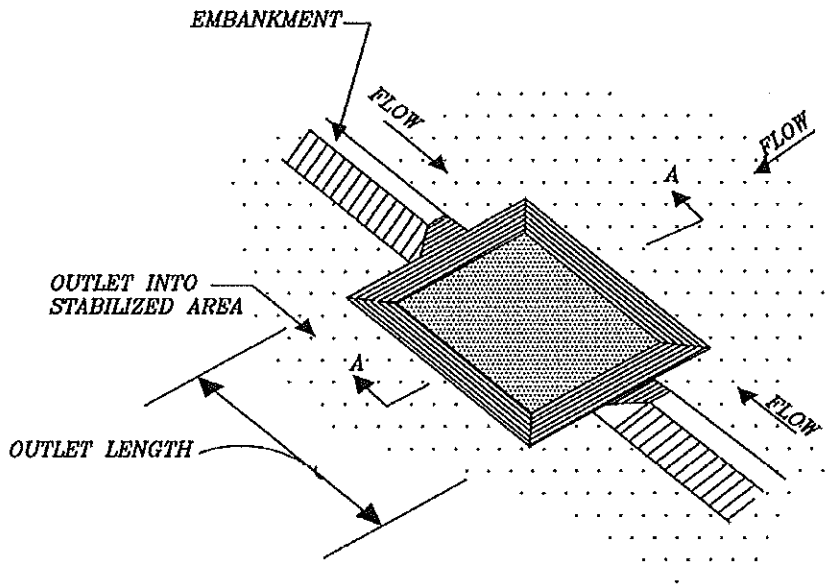

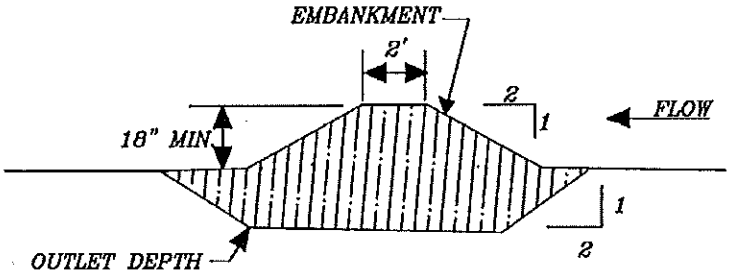

SECTION A–A

Not to Scale

General Notes:

1. Construct the trap in accordance with the dimensions shown on the construction drawings.
2. Tope width of embankment shall be 2 feet.
3. Side slopes shall be 2:1 or flatter.
4. Outlet onto stabilized area.

XE
ST

FIGURE 4.3-3
BMP 4322
EXCAVATED EARTH OUTLET SEDIMENT TRAP

EMBANKMENT EARTH OUTLET SEDIMENT TRAP

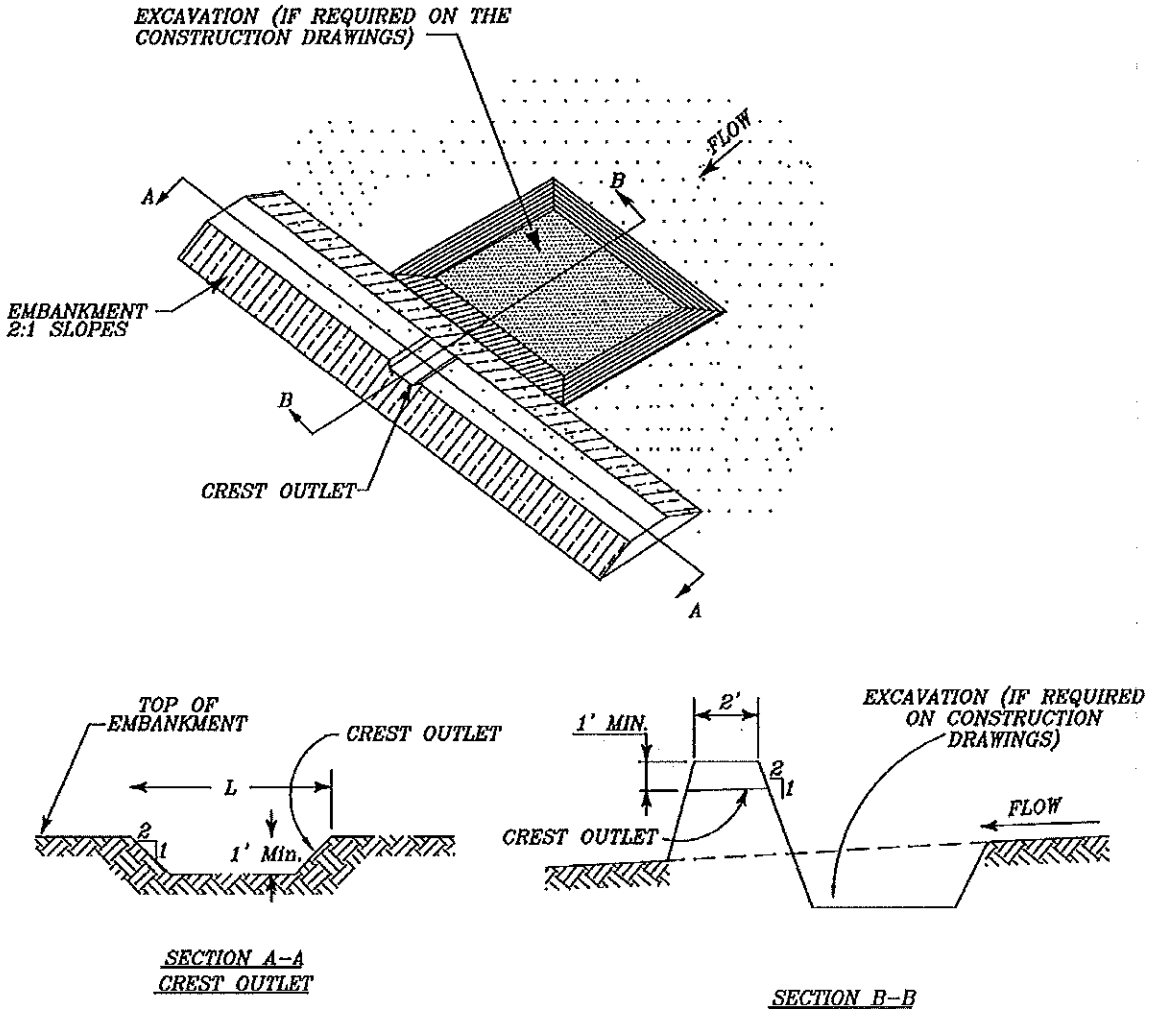

Not to Scale

General Notes:

1. Construct the trap in accordance with the dimensions shown on the construction drawings.
2. Top width of embankment shall be 2 feet.
3. Side slopes shall be 2:1 or flatter.
4. Outer crest outlet flowline shall be at least 1 foot below the top of the embankment.
5. Outlet onto stabilized area with level spreader.

EE
ST

FIGURE 4.3-4
BMP 4323
EMBACKMENT EARTH OUTLET SEDIMENT TRAP

4.3.3 Sediment Basin

A. Definition

A **sediment basin** is a temporary basin or dam constructed across a waterway or excavated location to intercept sediment-laden runoff and to trap and retain the sediment.

B. Purpose

The purpose of a sediment basin is to intercept sediment-laden runoff and to reduce the amount of sediment leaving the disturbed area by reducing runoff velocity. Reducing runoff velocity allows the larger particles to settle out in order to protect drainage ways, properties, and rights-of-way below the sediment basin from sedimentation.

C. Conditions Where Practice Applies

A sediment basin applies where physical site conditions or land ownership restrictions preclude installation of barrier-type erosion control measures to control runoff, erosion, and sedimentation adequately. A sediment basin may be used below construction operations which expose critical areas to soil erosion.

D. Planning Considerations

Sediment basins should only be used on sites where failure of the structure would not result in loss of life, damage to homes or buildings, or interruption of use of service of public roads or utilities.

For drainage areas serving 10 or more acres, a temporary (or permanent) sediment basin, or equivalent control measures, should be provided where attainable until final stabilization of the site. The sediment basin should provide storage for a calculated runoff volume from a 2-year, 24-hour storm. In Harris County, a 2-year, 24-hour storm results in rainfall of 5.5 inches. Using a runoff coefficient of 0.35, the calculated storage volume for Harris County is 7,000 cubic feet of storage per drained acre. When computing the runoff volume, it is necessary to include flows from offsite areas and flows from onsite areas that are either undisturbed or have undergone final stabilization where such flows are diverted around both the disturbed area and the sediment basin. Where a temporary (or permanent) sediment basin or equivalent controls are not attainable, smaller sediment basins and/or sediment traps should be used.

For drainage areas serving less than 10 acres, sediment basins and/or sediment traps may be used. At a minimum, filter fabric fences or equivalent sediment controls are required for all sideslope and downslope boundaries of the construction area unless a sediment basin providing storage for a calculated runoff volume from a 2-year, 24-hour storm (7,000 cubic feet of storage per acre drained) is provided.

E. Design Criteria and Requirements

1. The sediment basin should be located to obtain the maximum storage benefit from the terrain and for ease of cleanout of the trapped sediment. It should be located to minimize interference with construction activities and construction of utilities.
2. Size of the basin: The volume of the sediment basin, as measured from the bottom of the basin to the elevation of the crest of the low-flow riser, should have a storage capacity for a 2-year, 24-hour storm or 7,000 cubic feet per acre

drained. If this storage volume is not attainable, either due to site conditions, area availability, or public safety, then a smaller volume may be provided, but in no case should the volume be less than 1,800 cubic feet per acre drained.

The required basin volume can be calculated as follows:

$$V_{Total} = V_A * DA$$

Where, V_{Total} = Total storage volume, cf
V_A = Required storage volume per acre of drainage area, cubic feet per acre
DA = Drainage area, acres

The basin volume is also based on the length, width, depth, and side slopes. For basins with uniform width, the basin volume is calculated as follows:

$$V_{Total} = rhw^2 + sh^2(1+r)w + \frac{4}{3}s^2h^3$$

Where, r = Ratio of length to width
h = Average basin design depth, feet
s = Side slope in ratio of horizontal to vertical run for all sides of the basin
w = Basin width, feet

Solving for basin width,

$$w = \frac{-b + \sqrt{b^2 - 4ac}}{2a}$$

Where, a = rh
$b = sh^2(1 + r)$
$c = 4/3\ s^2h^3 - V_{Total}$

The total basin area then can be calculated as:

$$A = rw^2 + 2shw(1+r) + 4s^2h^2$$

Where A = Total basin area at the surface, square feet

The table below shows the minimum basin area required to provide storage volume for 7,000 cubic feet per acre drainage area and the recommended excavation area. The recommended excavation area is based on a minimum basin depth of three (3) feet. The minimum three (3) feet depth accounts for the depth of the inflow channel or pipe. The basin depth is increased to five (5) feet for larger drainage areas to minimize the excavation area needed for the required volume. Assumptions used for the basin dimension table are one (1) foot of freeboard to the crest elevation; 3:1 side slopes; and a length to width ratio of 2:1. This does not include additional area which may be required for a maintenance berm or access.

Drainage Area (acres)	Storage Volume[1] (cu ft)	Basin Floor Surface Area (acres)	Recom'd. Bottom Width[2] (feet)	Recom'd. Bottom Length (feet)	Recom'd Effective Depth[3] (ft)
1	7,000	0.08	25	50	3
5	35,000	0.35	70	140	3
10	70,000	0.45	70	140	5
20	140,000	0.83	105	210	5
50	350,000	1.92	175	350	5
100	700,000	3.60	250	500	5

[1] Values are based on 2-year, 24-hour storm data for Houston/Harris County.

[2] Values are rounded up to a multiple of 5.

[3] Basin shall have at least one foot of freeboard beyond the effective depth shown here.

The basin dimensions necessary to obtain the required basin volume, as stated above, should be shown clearly on the plans to facilitate plan review, construction, and inspection.

3. Riser design: A vertical pipe or box-type riser joined (watertight connection) to a pipe (barrel) should extend through the embankment and outlet beyond the downstream toe of the fill.

   - The minimum size of the barrel should be eight (8) inches in diameter.
   - The riser materials should be either corrugated metal, PVC, HDPE, or other suitable plastic material pipe.
   - Filter fabric shall be as specified in Section 4.2.1 - Filter Fabric Fences.
   - The crest elevation should be at least 18 inches above the top of the riser.
   - The riser should be designed to provide for automatic dewatering following a storm event. This can be achieved by using perforated pipe wrapped with a well-secured filter cloth. Drawdown time should exceed 30 hours.
   - An antivortex device and trash rack should be installed securely on top of the riser.
   - The riser should have a base attached with a watertight connection and should have sufficient strength to prevent flotation of the riser.
   - Antiseep collars shall be required when the soil conditions or length of service make piping through the backfill a possibility.
   - The number of collars shall be determined from the backfill conditions and the length of pipe installed.
   - Cutoff collars will be spaced at not more than 25-foot centers. If only one (1) is used, it should be placed not more than 25 feet from the riser. Collars and their connections to the pipe should be watertight and should be located no closer than two (2) feet to a pipe joint.

   There are two types of risers that can be used to control the drawdown time: 1) a perforated riser, and 2) a slotted slow release riser. For a perforated riser the total

area of all holes required to regulate the outflow to achieve the drawdown time can be calculated as follows:

$$A_P = \frac{V}{120.3\Delta t\sqrt{\Delta h}}$$

Where, A_p = Total required perforation area, square inches
V = Design Storage Volume, cubic feet
Δt = Drawdown time of 24 hours or greater, hours
Δh = Effective depth of basin, feet

To obtain the number of ½" diameter holes required, divide the area A_P by 0.196. Wrap filter fabric around the riser pipe to prevent clogging. Perforated riser is only recommended for drainage area of 20 acres or more.

The second type of riser for slow release is the slotted slow release riser with a reduced orifice. The slotted slow release riser is more resistant to clogging and is recommended over the perforated riser. The slot may be rectangular or round which allows water to flow in freely. The reduced orifice can either be a plate that controls the discharge or a reducer pipe.

The total orifice area can be calculated by using the following formula:

$$A_o = \frac{A_T\sqrt{\Delta h}}{100.3c\Delta t}$$

Where, A_o = Total required orifice area, square inches
A_T = Basin area, square feet
Δh = Effective basin depth, feet
Δt = Drawdown time, hours
c = Average orifice discharge coefficient, 0.6

The following table shows the minimum orifice diameter required to provide a 30-hour drawdown time for a storage volume of 7,000 cubic feet per acre.

Drainage Area (acres)	Min. Pipe Size for Perforated Riser (in)	Perforated Area (sq in)	Number of ½" holes [1]	Number of ½" Holes per Row	Number of ½" Rows [2]	Orifice Size Diam.[3] (in)
1	8	-	-	-	-	3
5	8	-	-	-	-	5
10	8	-	-	-	-	6
20	8	17	89	25	6	8
50	12	43	222	31	9	12
100	14	87	443	43	19	16

[1] Perforated Riser is not recommended for drainage area of less than 20 acres.
[2] Rows of 1/2" holes are staggered. Vertical spacing between perforated row (center to center) is 2.5 inches.
[3] Vertical spacing between slotted row (center to center) is 2.5 inch.

4. Embankment cross section: The minimum top width shall be four feet. The side slopes should not be steeper than 2:1.

   Careful consideration should be given to the design of the embankment height. It should be at least 12 inches higher than the top of the riser pipe and should be low

enough not to cause flooding or backup of the upstream area. Weir structures, check dams, or emergency spillways may be needed.

5. Entrance of runoff into basin: Points of entrance of surface runoff into excavated sediment basins should be protected to prevent erosion. Diversions, grade stabilization structures, or other water control devices should be installed as necessary to assure direction of runoff and to protect points of entry into the basin.

6. Safety: It is recommended that sediment basins be fenced or otherwise made inaccessible to people or animals, unless this is deemed unnecessary due to the remoteness of the site or other circumstances.

7. Information to be considered in design:

   Sediment basin design and construction plans should be done in accordance with local entity criteria and submitted for review, and should include the following:

   - Specific location of basin
   - Geotechnical information
   - Plan view of dam and storage basin
   - Cross section of dams and riser
   - Details of pipe connections, riser to pipe connection, riserbase, trash rack, antivortex device and when required, antiseep collars
   - Runoff calculations for the 2-year 24-hour storm. If this calculation is not performed, use 7,000 c.f./acre
   - Storage computation:

     Total drainage volume required.

     - Total required (2-yr., 24-hr. volume or total drainage area x 7,000 c.f./ac.).
     - Total available (calculated volume of basin).
     - Level of sediment at which cleanout shall be required; to be stated a distance from the riser crest to the sediment surface (elevation below which volume represents one third of basin volume).
   - Calculations showing design of piping, including perforated or slotted holes.
   - Other information deemed necessary by the reviewing public entity.

F. Inspection and Maintenance

The sediment basin should be inspected at least once every 14 calendar days and within 24 hours of the end of a storm event of 0.5 inches or greater; or at a minimum of once every seven (7) calendar days. Repair or replacement should be made immediately.

The sediment basin should be cleaned out when the volume as described above is reduced by one-third, except in no case should the sediment level be permitted to build up higher than one (1) foot below the principal spillway crest. This cleanout should restore the original design volume to the sediment basin. The elevation corresponding to the maximum allowable sediment level should be determined

during the design of the basin and should be stated on the final plans as a distance below the top of riser and should be clearly marked on the riser.

The disposed sediment should be placed in an approved spoil disposal site.

G. Corresponding Technical Specifications (Refer to Appendix C)

Item No. 4331	Sediment Basin with Pipe Outlet
Item No. 4332	Sediment Basin with Stone Outlet

SEDIMENT BASIN WITH PIPE OUTLET

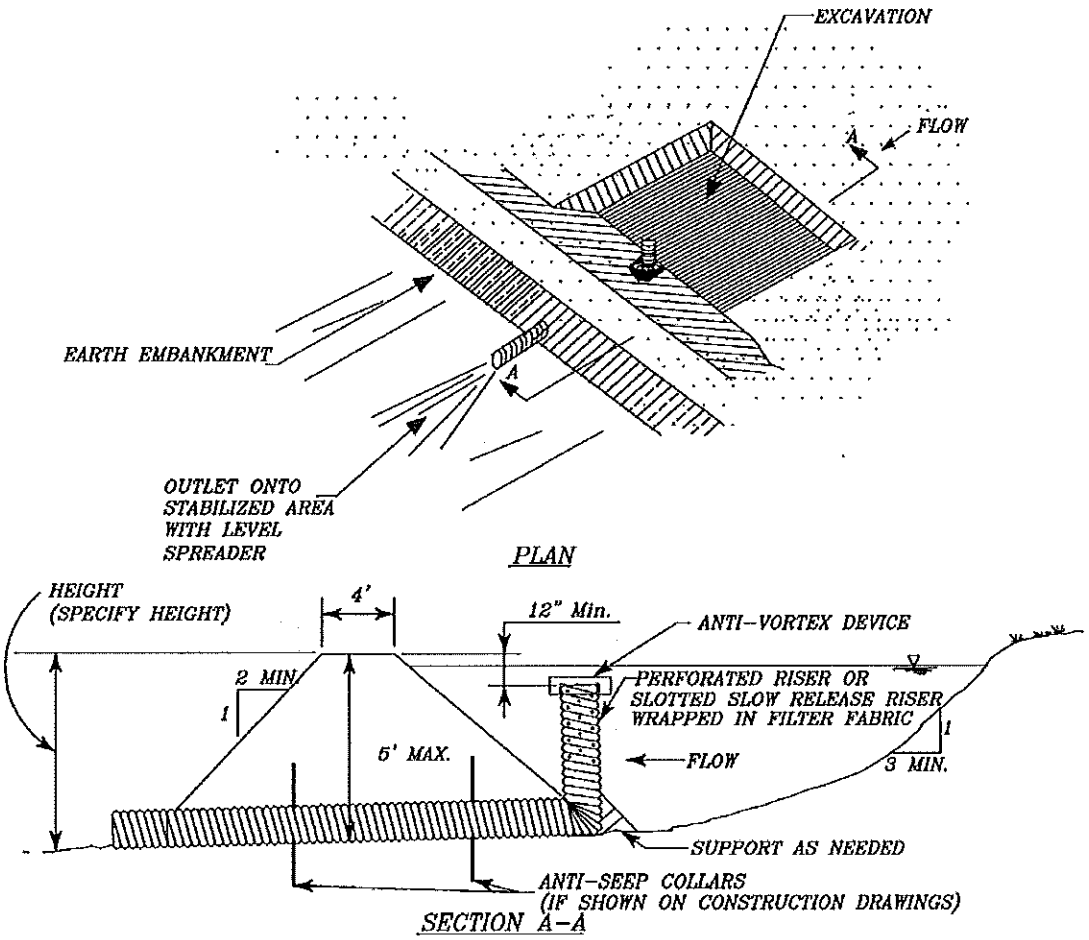

Not to Scale

General Notes:

1. Pipe material – corrugated metal pipe, PVC, HDPE, or other plastic material.
2. Filter fabric – see Item 4211.
3. Dimensions – (specify limit of excavation and pipe diameter on this or on the construction drawings.)
4. Riser perforation or slots – (here or on the construction drawings.)
5. All pipe connections shall be watertight.
6. Fill material around pipe shall be compacted in 4 inch lifts. A minimum of 2 feet of compacted backfill shall be placed over the pipe before crossing it with construction equipment.
7. Ponding of sediment laden runoff in sediment basin accomplished by embankment or excavation depending on terrain. Show on this drawing or reference construction drawing for basin type and dimensions.
8. Side slopes shall be 2:1 or flatter.

SB PO

FIGURE 4.3-5
BMP 4331
SEDIMENT BASIN WITH PIPE OUTLET

SEDIMENT BASIN WITH STONE OUTLET

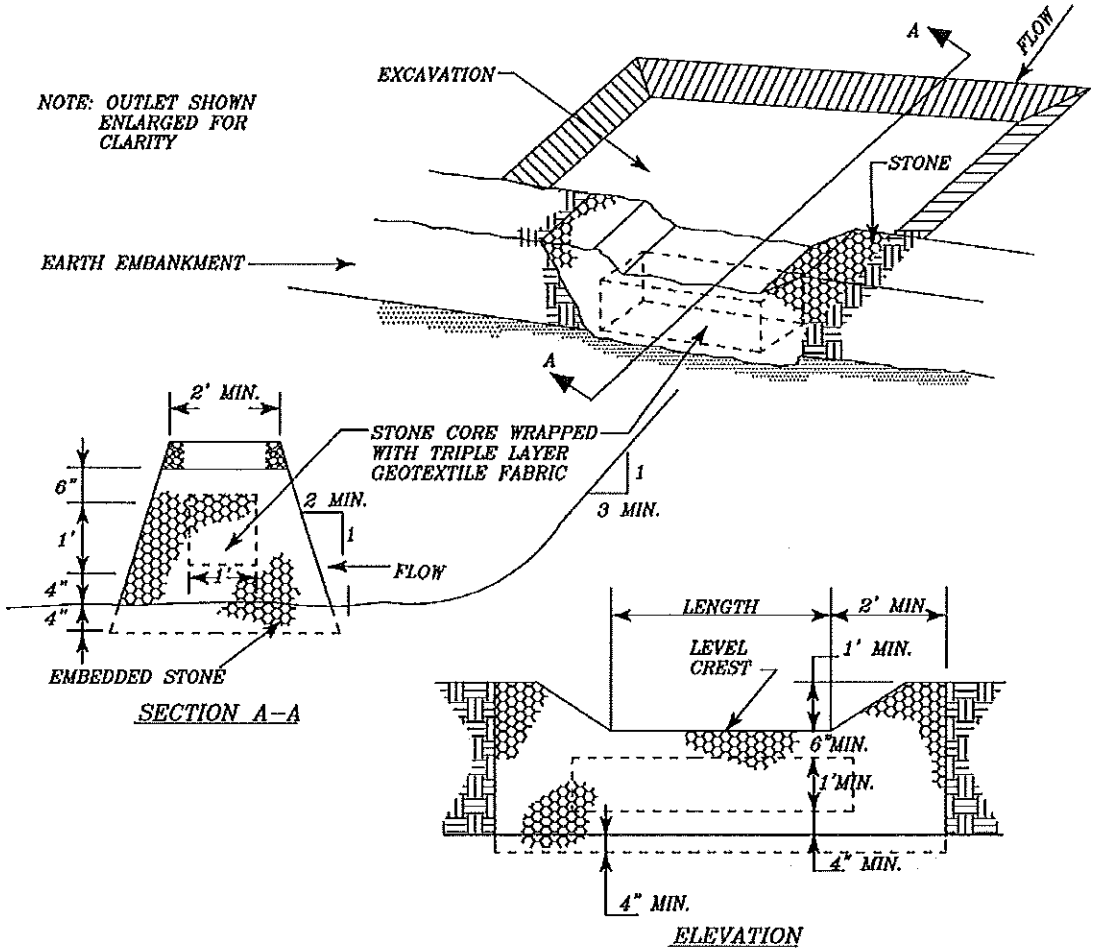

Not to Scale

General Notes:

1. Specify dimensions limit of excavation and outlet length and height on this or on the construction drawings.
2. Filter fabric – see Item 4211.
3. Maintain a minimum of 6 inches between the top of the core material and the top of the stone outlet, a minimum of 4 inches between bottom of core material and existing ground and a minimum of 1 foot between the top of stone outlet and the top of embankment.
4. Rock shall be embedded a minimum of 4 inches into the existing ground.
5. Core shall be a minimum of 1 foot in height and in width and shall be wrapped in a triple layer of geotextile fabric.
6. Ponding of sediment laden runoff in sediment basin accomplished by embankment or excavation depending on terrain. Show on this or reference construction drawings for basin type and dimension.
7. Outlet onto stabilized area.
8. Side slopes shall be 2:1 or flatter.

SB SO

FIGURE 4.3-6
BMP 4332
SEDIMENT BASIN WITH STONE OUTLET

4.3.4 Sandbag Barrier

A. Definition

A **sandbag barrier** is a temporary sediment barrier constructed of stacked sandbags installed across a channel or right of way in a construction or disturbed area.

B. Purpose

To intercept sediment-laden storm water runoff from disturbed areas, create a retention pond, detain sediment and release water in sheet flow.

C. Condition Where Practice Applies

Sandbag barriers are used during construction activities in unstabilized minor swales, ditches, or streambeds when the contributing drainage area is no greater than 2 acres. For larger contributing areas, sediment traps or sediment basins should be used.

D. Planning consideration

Under normal conditions, sandbag barriers require removal of trapped sediment. If maintenance is difficult due to location or presence of wet soils that prohibit prompt cleaning after runoff events, additional parallel barriers should be constructed.

E. Design Criteria and Requirements

A detailed design is not required for installation of a sandbag berm; however, the following criteria shall be observed:

Drainage Area Less than two (2) acres.

Sandbag Size Length 18 to 24 inches, width 12 to 18 inches, and thickness six (6) to eight (8) inches. Weight approximately 40 to 50 pounds, not to exceed 75 pounds.

Fabric Specification Material

Sandbag Material shall meet the following specifications: Polypropylene or polyethylene woven fabric, minimum unit weight of four (4) ounces per square yard, minimum grab strength of 100 psi in any principal direction (ASTM D 4632), puncture strength exceeding 300 psi (ASTM D 4833), and ultraviolet stability exceeding 70 percent after 500 hours of exposure (ASTM D 4355).

Sand Grade Coarse sand.

F. Inspection and Maintenance

1. Sandbag barrier shall be inspected at least once every 14 calendar days and within 24 hours of the end of a storm event of 0.5 inches or greater; or at a minimum of once every seven (7) calendar days. Repair or replacement shall be made immediately.
2. Sediment deposits should be removed after each storm event and no later than at such time as deposits reach one-third the height of the barrier.

G. Corresponding Technical Specification (Refer to Appendix C)

Item No. 4312 Sandbag Barrier

4.3.5 Bagged Gravel Barrier

A. Definition

A **bagged gravel** is a temporary sediment barrier constructed of stacked bags of gravel installed across a channel or right of way in a construction or disturbed area.

B. Purpose

To intercept sediment-laden storm water runoff from disturbed areas, create a retention pond, detain sediment and release water in sheet flow.

C. Condition Where Practice Applies

Bagged gravel barriers are used during construction activities in unstabilized minor swales, ditches, or streambeds when the contributing drainage area is no greater than 2 acres. For larger contributing areas, sediment traps or sediment basins should be used.

D. Planning consideration

Under normal conditions, bagged gravel barriers require removal of trapped sediment. If maintenance is difficult due to location or presence of wet soils that prohibit prompt cleaning after runoff events, additional parallel barriers should be constructed.

E. Design Criteria and Requirements

A detailed design is not required for installation of a bagged gravel berm; however, the following criteria shall be observed:

Drainage Area Less than two (2) acres.

Bag Size Length 18 to 24 inches, width 12 to 18 inches, and thickness six (6) to eight (8) inches. Weight not to exceed 75 pounds.

Fabric Specification Material

Bag Material shall meet the following specifications: Polypropylene or polyethylene woven fabric, minimum unit weight of four (4) ounces per square yard, minimum grab strength of 100 psi in any principal direction (ASTM D 4632), puncture strength exceeding 300 psi (ASTM D 4833), and ultraviolet stability exceeding 70 percent after 500 hours of exposure (ASTM D 4355).

Gravel Aggregates are to consist of gravel composed of clean, hard, durable materials free from adherent coatings, salts, alkali, dirt, clay, loam, shale, soft or flaky materials, or organic or injurious matter.

F. Inspection and Maintenance

1. Bagged gravel barrier shall be inspected within 24 hours after each rainfall of 0.5 inches or greater, daily during periods of prolonged rainfall, and minimally, at least once every 14 calendar days. The SWP3 may be developed to require that these inspections will occur at least once every seven (7) calendar days. Repair or replacement shall be made immediately.
2. Sediment deposits should be removed after each storm event and no later than at such time as deposits reach one-third the height of the barrier.

G. Corresponding Technical Specification (Refer to Appendix C)

Item No. 4351 Bagged Gravel Barrier

4.4 BEST MANAGEMENT PRACTICES FOR ESTABLISHING PERMANENT DRAINAGEWAYS

Site modifications change local drainage patterns, resulting in increased runoff in existing or new drainageways. This occurs during and after construction. Planned permanent drainageways, whether existing or new, require careful design to provide proper conveyance without causing erosion and to improve water quality during and after construction. This practice applies to channels, including ditches, swales and diversions, constructed as part of a development to transport surface runoff. This does not apply to major, continuously flowing natural streams. This section focuses on considerations related to erosion and sedimentation control. The Best Management Practices (BMPs) shown were taken from various sources. Applicable design criteria for the appropriate agency should be consulted for evaluation of shape, depth, and capacity of permanent drainage channels.

Drainageway practices include:

- Vegetated channels:

  Sodding (Section 4.4.2)

  Grassed waterway (Section 4.4.3)

  Reinforced grassed waterway (Section 4.4.4)

- Lined Channels:

  Riprap (Section 4.4.5)

  Lined waterways (Section 4.4.6)

4.4.1 Permanent Drainageway Considerations

The two primary elements in drainageway design are cross-section shape and lining. The two main design considerations are capacity and erosion resistance, which require evaluation of flow volume and velocity.

A. Cross-Sections

Use the local public entity's design criteria for cross-sectional geometry. Three typical cross-sections are:

Triangular (V-shaped): For relatively small flows, such as along roadsides. Flow velocities may range from low to high, depending on channel slope and lining.

Parabolic: For larger flows and where space is available for a wide, shallow channel with low-velocity flow.

Trapezoidal: For large flows and relatively high velocities. Lining typically is concrete or riprap.

B. Capacity

The capacity of a permanent drainageway should be evaluated using local public entity's design criteria.

C. Velocity

Drainageways should be designed so that the expected flow velocity from the design storm does not exceed the permissible velocity for the type of lining used.

Outlets should be checked for stability. Excessive velocities or grade changes may require protective or stabilizing structures, transition sections, or energy dissipators to prevent erosion or scour.

Velocities also can be controlled by using sod or seed and mulch practices on contributing land surfaces to reduce entering discharges and velocities.

D. Lining

Lining is determined by erosion resistance and drainage requirements. All-vegetated linings are appropriate for low velocities. See the following sections for discussion of grass-lined channels. Riprap, properly sized and graded, may be used for low to high velocities. Gabions have design stability limits. Concrete linings have no specific velocity limit, but velocities in concrete channels must not exceed the permissible velocity of the receiving channel.

4.4.2 Sodding

A. Definition

Sodding is the application of sod rolls or mats to rapidly establish a permanent grass cover to stabilize disturbed areas.

B. Purpose

Used to prevent channel erosion by protecting soil surfaces and decreasing flows and velocities, through in-channel and upland flow retardance and infiltration. Stabilizes disturbed areas to minimize erosion by decreasing the velocity of sheet flow.

C. Conditions Where Practice Applies

Sodding may be used where initial flow velocity is low to moderate.

Sodding can be applied to unstabilized swales, ditches, or diversions where flow velocities are less than five (5) feet per second. For greater velocities, see Section 4.4.4 Reinforced Grass Waterways.

Sodding is also applicable to any disturbed area with overland flow runoff.

D. Planning Considerations

Sod may provide more permanent cover than seeding or mulching.

Sodding also includes sod ditch checks.

E. Design Criteria and Requirements

1. Preparation:

   Test the soil to determine soil additive and fertilizer requirements. Additives should be spread evenly over the area and incorporated into the top 4 to 8 inches of soil. Topsoil may be used.

   Before laying the sod, clear the soil surface of stones, debris sticks and clods larger than 2 inches in diameter. Grade the surface, filling or leveling to avoid standing water, and to achieve a level final grade.

   Firm the soil by rolling or cultipacking. Avoid excessive compaction from the use of heavy equipment on the area.

2. Installation:

   Install the sod no later than 7 days after final grading of the channel or area.

   The sod must be moist, and installation should be completed within 2 days of harvest.

   Begin placement downslope, and progress upslope. Placement shall be in staggered rows, as in laying bricks, at right angles to the direction of flow.

   For grassed waterways, edges should butt tightly together. Extend the sod sideward from the channel centerline to a point at least 1 foot in elevation above the flowline elevation. Along the perimeter of the sodded area, one strip of sod should be extended outward a minimum of 30 inches beyond others at 8-foot intervals or closer.

   On slopes of 3:1 or greater, or wherever erosion may be a problem, secure the sod with stakes or staples. In critical areas, secure sod with netting and staples.

   Roll newly installed sod to establish firm contact between roots and soil.

   Irrigate well after rolling. Keep the sodded areas moist until the grass takes root.

3. Sod Checks For Channels:

   Sod checks are rows of sod laid laterally from berm to berm across a swale or ditch to decrease flow velocity and should be 6 feet wide and placed at increments of:

$$\frac{1}{channel\ slope} * 1\ foot$$

   For example, sod checks shall be placed every 50 feet along a channel with a slope of 0.02.

F. Inspection and Maintenance

After the first week, water as needed to maintain adequate moisture in the root zone and to prevent dormancy of the sod.

Mow only after the sod is firmly rooted, usually in about 2 to 3 weeks. Do not remove more than 1/3 of the shoot during mowing.

Maintain grass height between 2 to 3 inches unless otherwise specified.

Inspect sod within 24 hours after each rainfall or daily during periods of prolonged rainfall. Damaged sod should be repaired or replaced immediately.

G. Corresponding Technical Specification (Refer to Appendix C)

Item No. 4421 Sodding

4.4.3 Grassed Waterways

A. Definition

A **grassed waterway** is a constructed drainageway or channel with vegetated lining established by sodding or seeding.

B. Purpose

To prevent channel erosion by providing a protective cover and decreasing velocity through retardance.

C. Conditions Where Practice Applies

Grassed waterways may be used to convey flows with velocities of no more than 5 ft/sec. Grass type, slope and soil conditions will determine final allowable velocities

D. Planning Considerations

Permissible 25-year velocities and Manning's "n" values are on the table below.

MANNING'S "n" VALUES AND ALLOWABLE 25-YEAR VELOCITIES FOR CHANNEL DESIGN			
Channel Description	Roughness Coefficient or Manning's "n" Value	Average Velocity (feet per second)	Maximum Velocity (feet per second)
Grass Lined:			
Predominately Clay	0.04	3.0	5.0
Predominately Sand	0.04	2.0	4.0

Source: *Harris County Flood Control District, Criteria Manual for the Design of Flood Control and Drainage Facilities.*

Channels should be located to conform with and use the natural system. The channel course should avoid sharp changes in direction or grade.

Grass-lined channels must not be subject to sedimentation from disturbed areas. Sediment traps may be needed at channel inlets and outlets.

Grass-lined channels should be constructed early in the project before grading and paving increase runoff rates so that dense, resistant vegetation can be established before use of the channel. Temporary water diversions may be needed until the vegetation is established.

Protective liners, such as geotextiles or special mulch protection, may be needed until the vegetation is established. If design velocities exceed 2 ft/sec for bare soil conditions, these protections must be used for seeding practices, or sodding must be used.

E. Design Criteria and Requirements

Timing Vegetation and any protective materials shall be installed within 7 days of final channel grading.

Capacity The capacity of the channel and the required width and depth dimensions should be evaluated in accordance with existing regulatory entity's design criteria.

Outlets All grassed waterways shall have a stable outlet with adequate capacity, and designed and built to prevent erosion of channels and banks.

F. Inspection and Maintenance

Grassed waterways should be inspected at least once every 14 calendar days and within 24 hours of the end of a storm event of 0.5 inches or greater; or at a minimum of once every seven (7) calendar days. During the initial establishment period, repairs and replacements should be made immediately.

After the grass has become established, the channel should be checked periodically. All repairs or replacement should be made as soon as possible. If the channel is to be mowed, it should be done in a manner that will not damage the grass. No more than 1/3 of the shoot should be removed with any mowing.

4.4.4 Reinforced Grassed Waterways

A. Definition

Reinforced grassed waterways are waterways with vegetated linings that are reinforced with a structural or fabric matrix, or include reinforced sections, for higher velocity conveyance, erodible soils, or baseline flow.

B. Purpose

To prevent channel erosion by providing a protective cover, and decreasing flows and velocity through retardance and infiltration.

C. Conditions Where Practice Applies

Waterways with grass linings may be used to convey flows with velocities of no more than 6 ft/sec. Reinforcement matrices allow higher velocities, or use with less resistant soils.

Rock or concrete centers are suitable where there are high velocity permanent baseline flows.

D. Planning Considerations

Where stone pavers, grid pavers or other erosion-resistant material are used to supplement the vegetation, velocities can be increased by 2.0 ft/sec.

Stone or riprap centers are subject to clogging from sediment. Proper rock size for stone centers can be determined from Figure 4-1 in Section 4.4.5.

Geotextile reinforced grassed waterways are a relatively new practice for stabilizing vegetated channels, and require careful engineering analysis and design.

Temporary sediment control measures such as mulching and filter fabric barriers may be needed in conjunction with the geotextile matrix.

E. Design Criteria and Requirements

Timing	Vegetation and any protective materials should be installed within seven (7) days of final channel grading.
Capacity	The capacity of the channel and the required width, depth and other dimensions should be evaluated in accordance with existing regulatory entity design criteria.

Energy Dissipation

Riprap or gabions should be placed for a length of at least 20 feet from storm sewer outfalls and other conveyance structures to dissipate energy associated with turbulent flow.

Outlets All grassed waterways should have a stable outlet with adequate capacity, and designed and built to prevent erosion of channels and banks.

Placement of Reinforcement Material

Materials shall be placed and anchored to the manufacturers' specifications.
Geotextile matrices may be utilized as root-reinforcement, and shall extend up the side slope.

F. Inspection and Maintenance

Grassed waterways should be inspected at least once every 14 calendar days and within 24 hours of the end of a storm event of 0.5 inches or greater; or at a minimum of once every seven (7) calendar days until the vegetation is well established. During the initial establishment period, repairs and replacements should be made immediately.

After the grass has become established, the channel should be checked periodically. All repairs or replacement should be made as soon as possible. If the channel is to be mowed, it should be done in a manner that will not damage the grass. No more than one-third of the shoot should be removed with any mowing.

Riprap should be checked periodically for dislodged stones and to assure that scour does not occur beneath the riprap layer.

4.4.5 Riprap

A. Definition

Riprap is a layer of crushed concrete, loose rock, or aggregate placed over an erodible soil surface.

B. Purpose

Riprap protects the soil surface from the erosive forces of water and allows some infiltration.

C. Conditions Where Practice Applies

Riprap may be used for soil-water interfaces where the soil conditions, water turbulences and velocity, expected vegetative cover, and ground water conditions are such that the soil may erode under design flow conditions.

Specific locations include channels, ditches, and diversions with permanent frequent low-flow or dry weather discharge.

Riprap also may be used as an erosion protection practice for storm drain outlets, drop structures, and shorelines.

D. Planning Considerations

Riprap may be unstable on very steep slopes, especially when rounded rock is used. For slopes steeper than 2:1, consider using materials other than riprap for erosion protection. Geotextiles or other filter medium may be required for erodible soils.

E. Design Criteria and Requirements

Size Riprap linings can be designed to withstand most flow velocities. The following chart gives stable stone sizes for flow velocities up to 17 ft/sec.

Placement Riprap should be designed in accordance with existing regulatory entity criteria.

F. Inspection and Maintenance

Lined waterways shall be inspected weekly for 3 months after installation.

Riprap should be checked periodically for dislodged stones and to assure that scour does not occur beneath the riprap layer. Repairs should be made immediately.

FIGURE 4-1
DESIGN CHART FOR RIPRAP LININGS

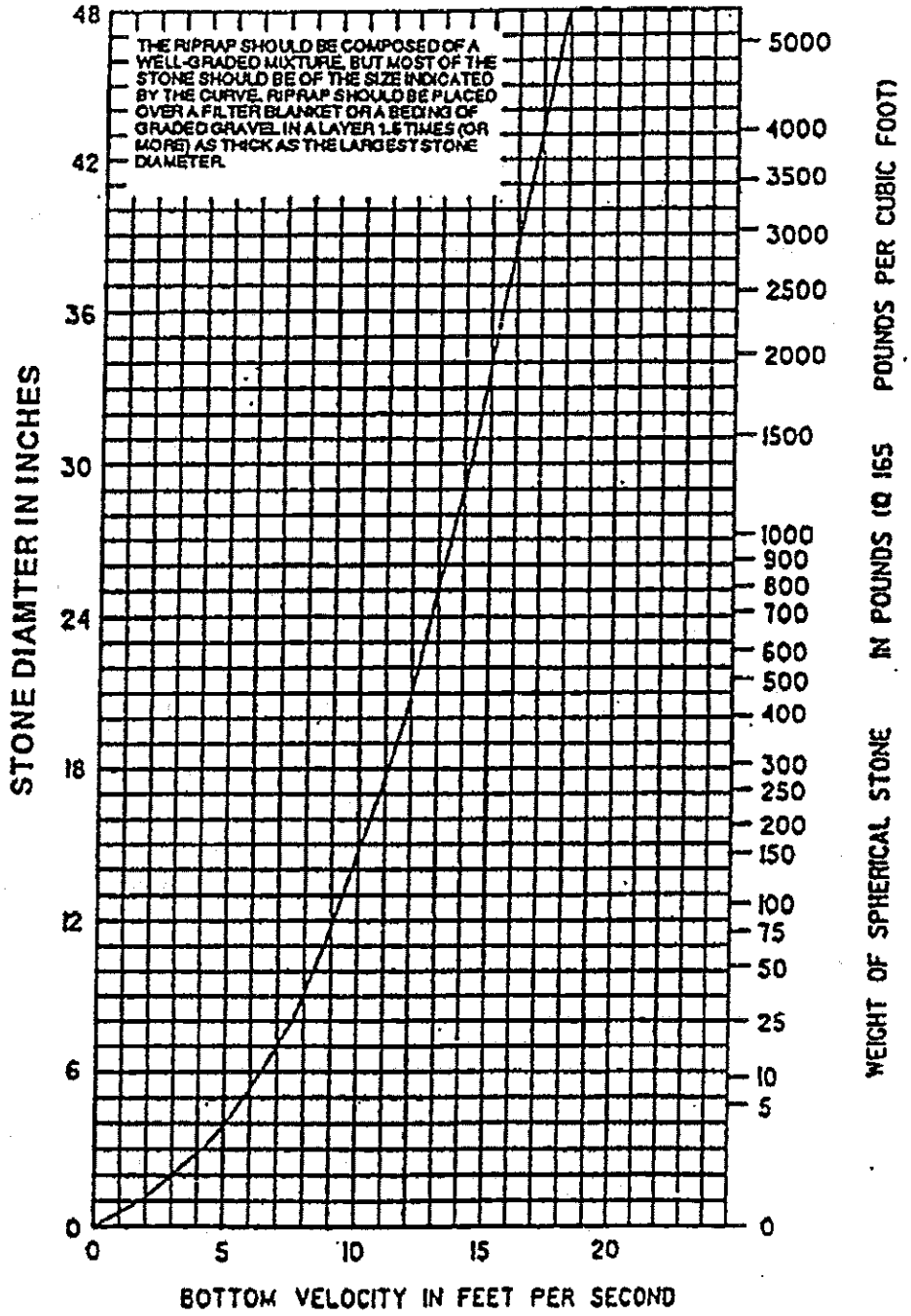

4.4.6 Lined Waterways

A. Definition

Lined waterways are channels with erosion-resistant linings paved with concrete, flagstone, gabions, or similar materials.

B. Purpose

Pavement protects the soil surface from the erosive forces of water.

C. Conditions Where Practice Applies

Paved linings may be used for soil-water interfaces where the soil conditions, water turbulence and velocity, expected vegetative cover, and groundwater conditions are such that the soil may erode under design flow conditions. Generally, velocities over five (5) feet per second will require lined waterways.

D. Planning Considerations

Rigid liners such as concrete or flagstone can carry large volumes of water without eroding. Unlike riprap—which can adjust to foundation conditions without failure—concrete and flagstone are less forgiving of foundation conditions. Flows and velocities in paved channels introduce high energies that must be controlled and dissipated to avoid damage to channel outlets and receiving streams.

Gabions, which are coated steel basket matrices enclosing rock, are slightly more flexible than pavement, but allow similar high velocities due to relatively low roughness.

Channels with smooth pavement such as concrete or flagstone usually are not limited by velocity, take up less land area, and can be constructed to limited site conditions compared to channels with other linings. Additionally, they provide a formal definition of water conveyance and may require less maintenance.

Foundation and hydraulic design must be executed competently to assure structural stability and adequate function. Appropriate measures are needed to reduce exit velocities to protect receiving waters and outlets.

E. Design Criteria and Requirements

Timing — Permanent materials must be installed within 14 days after final channel grading.

Velocity — Manning's "n" values for concrete and flagstone are given below. When the Froude Number approaches critical (between 0.7 and 1.3), channel flows may become unstable, and the designer should consider modifying the channel slope. Reaches for supercritical flow should be straight unless special design features are used.

Lining Material	Manning's "n"
Concrete:	
Trowel Finish	0.012-0.014
Float Finish	0.013-0.017
Gunite	0.016-0.022
Flagstone	0.020-0.025
Gabion	0.025-0.030

Cross-Section Shape

Cross-sections may be triangular, parabolic, or trapezoidal. Reinforced concrete- or gabion-lined channels may be rectangular.

Design Thickness

Concrete for linings should be a dense durable product, plastic enough for thorough consolidation but stiff enough to stay in place on side slopes. Minimum concrete thickness and minimum strength should be in accordance with existing public design criteria. Flagstone thickness should be a minimum of 4 inches including the mortar.

Gabion thickness depends on manufacturer specifications and stone sizes, which may range from 4 to 8 inches. Gabion weirs should be founded on a gabion apron which extends downstream. The apron length will depend on hydraulic and soils conditions, but in no case shall extend downstream less than the minimum lengths given in the following table:

Apron Length	
Gravel	6 Feet
Coarse or medium sand	9 Feet
Fine or silty sand	12 Feet
Clay	9 Feet

Source: *City of Austin Environmental Handbook*

Cutoff Cutoff walls are needed at the beginning and end of paved channels to protect against undercutting. Additional cutoff walls, transverse joints, and expansion joints may also be needed.

Depth The depth of the channel should be evaluated in accordance with existing regulatory entity design criteria.

Outlets All channels should have a stable outlet with adequate capacity, and should be designed and built to prevent erosion of channels and banks.

F. Inspection and Maintenance

Lined waterways shall be inspected weekly for 3 months after installation. Afterwards, inspect channels at regular intervals as well as after major rains. Make repairs promptly.

Concrete-lined channels should be inspected periodically to assure that there is no undermining.

Outlets should be checked for scour. If there is scour, appropriate energy dissipation measures shall be taken.

Carefully check road crossings for indications of bank failures, scour holes, and piping; make repairs immediately.

4.5 BEST MANAGEMENT PRACTICES FOR PROTECTING INLETS

Because the best management practices to minimize the movement of pollutants from the site can never be 100% effective, there remains a need to prevent pollutants from entering inlets, catch basins, culverts and other conveyance structures to prevent pollutants from reaching receiving waters.

All storm sewer inlets that are made operable during construction should be protected so that storm water runoff will not enter without first being filtered or otherwise treated to remove sediment. It is not practical to control drainage areas larger than one acre with this measure alone. Erosion control on the exposed land is also needed to limit the sediment movement. The measure should be left in place until adequate cover is established.

It is critical that storm sewer inlets not be completely blocked. Blocking an inlet can cause streets to flood, sediment to build up and become a hazard, and public safety may be impaired.

Best management practices include:

Inlet protection barriers (Section 4.5.1)
Drop inlet insert basket (Section 4.5.2)
Storm inlet sediment trap (Section 4.5.3)

4.5.1 Inlet Protection Barriers

A. Definition

An **inlet protection barrier** is a temporary barrier constructed around a storm drain inlet, catch basin or culvert.

B. Purpose

To prevent sediment and other pollutants from entering conveyance systems.

C. Conditions Where Practice Applies

At the location where runoff enters conveyance system structures such as curb inlets, drop inlets and culverts.

D. Planning Considerations

This best management practice uses many of the design criteria and requirements of Section 4.3.1 Reinforced Filter Fabric Barriers, Section 4.2.2 Hay Bale Fences, and Section 4.3.5 Bagged Gravel Barrier.

E. Design Criteria and Requirements

Timing The inlet protection barrier should be installed before the drainage area is disturbed.

Removal The inlet protection barrier shall remain in place and be maintained until the disturbed area is stabilized by permanent best management practices.

Placement The inlet protection barrier shall surround the inlet. Where the elevation of curbs or adjacent ground surfaces are higher than the top of the inlet structure, a storm inlet sediment trap may be used as discussed in Section 4.5.3.

Stage I inlet protection barriers on soil

Reinforced filter fabric barriers, and hay bale fences constructed on soil shall meet the following requirements:

Reinforced filter fabric barrier

The design criteria and requirements and maintenance requirements contained in Section 4.3.1 shall be used for all reinforced filter fabric barriers used for Stage I inlet protection with the posts located at all corners or approximately every 90 degrees and beams to connect the posts.

Hay bale fence

The design criteria and requirements and maintenance requirements contained in Section 4.2.2 shall be used for all hay bale fences used for inlet protection with the posts located at all corners or approximately every 90 degrees and beams to connect the posts.

Stage I inlet protection barriers on paved surfaces

Reinforced filter fabric barriers on paved surface shall be constructed to meet the design criteria and requirements and maintenance requirements contained in Section 4.3.1 except for the following:

a. Support for the filter fabric shall be provided by a heavy gauge welded fence, or 2 or 3 layers of 8-inch cement blocks.

b. The filter fabric shall extend outward away from the reinforced filter fabric barrier along the pavement for at least 12 inches and be covered with at least 4 inches of gravel or nylon gravel-filled bags.

c. The filter fabric shall be wired to the welded support structure or cement blocks or weighted down by an additional layer of cement blocks.

d. When installed in vehicular traffic areas, adjacent to such areas, or where vehicular traffic hazards exist (e.g. parking lots, roadways, etc.) orange filter fabric material (or another high-visibility color) should be used.

Hay Bale Fences

Hay bale fence on paved surface shall be constructed to meet the design criteria and requirements contained in Section 4.2.2, except that the bales can be weighted down with sandbags in lieu of rebar stakes.

Stage II inlet protection barriers on paved surfaces

Protection for Stage II inlets with completed pavement surfaces can also be provided by the following method.

Bagged gravel barriers, constructed in accordance with Section 4.3.5, can be placed in the gutter on each side along the back-end of a curb inlet to pond water and cause sedimentation in the gutter.

F. Inspection and Maintenance

1. Inlet protection barriers should be inspected at least once every 14 calendar days and within 24 hours of the end of a storm event of 0.5 inches or greater; or at a minimum of once every seven (7) calendar days. Repair or replacement should be made immediately.
2. Sediment deposits should be removed after each storm event and no later than at such time as deposits reach one-third the height of the fence or barrier.

G. Corresponding Technical Specification (Refer to Appendix C)

Item No. 4311	Reinforced Filter Fabric Barrier
Item No. 4351	Bagged Gravel Barrier
Item No. 4511	Inlet Protection Barriers

INLET PROTECTION BARRIER

(FOR STAGE I INLETS)

REINFORCED FILTER FABRIC BARRIER

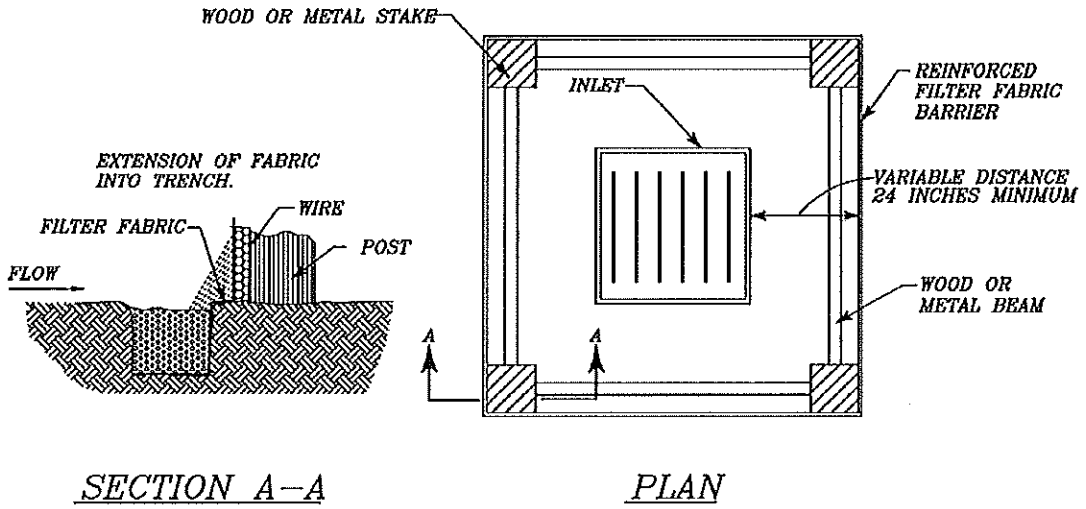

Not to Scale

General Notes:
See Figure 4.3-1 for Reinforced Filter Fabric Barrier

IPB

FIGURE 4.5-1a
BMP 4511
INLET PROTECTION BARRIERS FOR STAGE I INLETS

INLET PROTECTION BARRIER

(FOR STAGE I INLETS)

HAY BALE

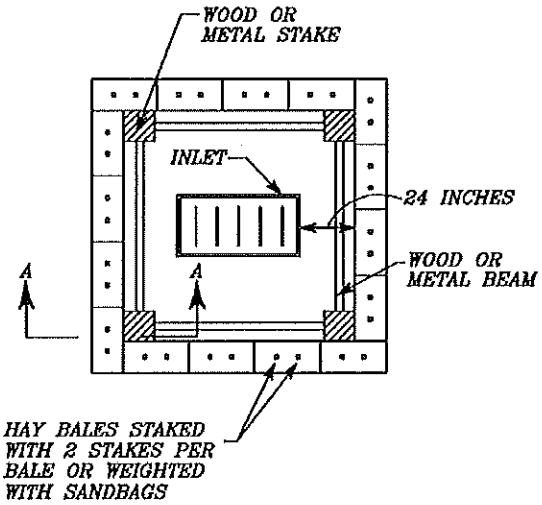

PLAN

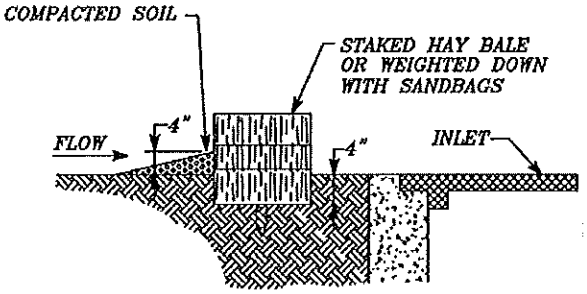

SECTION A–A

Not to Scale

General Notes:
See Figure 4.2-3 for Hay Bale Fence

IPB

FIGURE 4.5-1b
BMP 4511 (CONT.)
INLET PROTECTION BARRIERS FOR STAGE I INLETS

INLET PROTECTION BARRIER
(FOR STAGE II INLETS)
BAGGED GRAVEL BARRIER

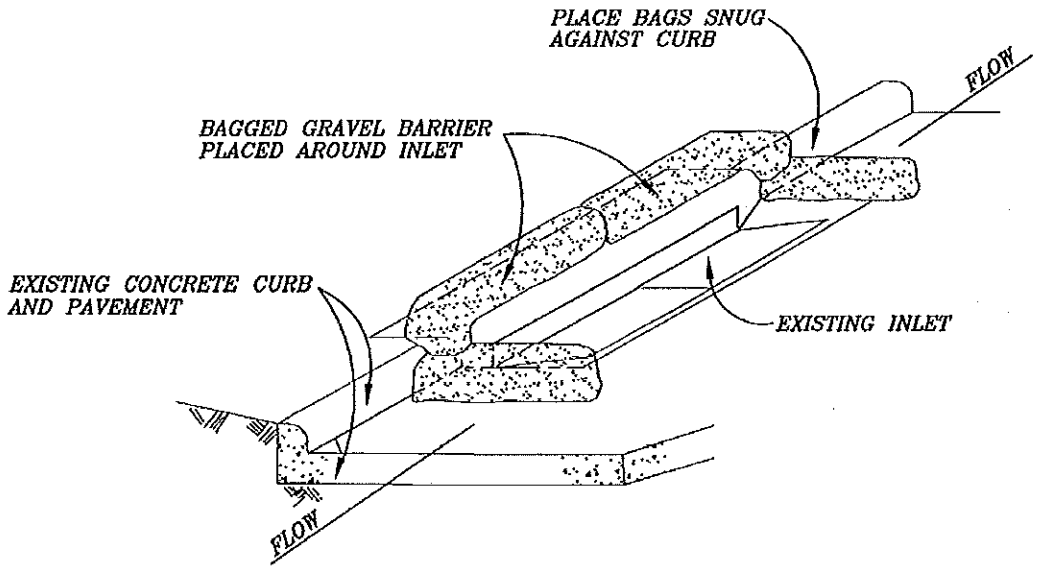

Not to Scale

IPB

FIGURE 4.5-2
BMP 4511 (CONT.)
INLET PROTECTION BARRIERS FOR STAGE II INLETS

4.5.2 Drop Inlet Insert Basket

A. Definition

A **drop inlet insert basket** is a temporary barrier placed within a storm drain inlet consisting of a filter fabric supported by a metal framework.

B. Purpose

To prevent sediment and other pollutants from entering conveyance systems.

C. Conditions Where Practice Applies

1. At the location where runoff enters conveyance system structures such as drop inlets.
2. Where the disturbed area within the drainage area is less than 0.25 acres per inlet.

D. Planning Considerations

This method has been developed to provide a barrier where a barrier surrounding the inlet is not practical or safe.

E. Design Criteria and Requirements

Timing The drop inlet insert basket or equivalent measure should be installed before the drainage area is disturbed. An inlet insert basket can be used after upper portion (Stage II) construction of drop inlets to replace another measure used to protect the lower portion (Stage I) drop inlet.

Removal The inlet insert basket should remain in place and be maintained until the disturbed area is stabilized by permanent best management practices.

Placement The inlet insert basket should fit into the drop inlet without gaps around the insert.

Basket Design

The support for the inlet insert basket should consist of fabricated metal as illustrated in the drawings. The basket shall be approximately 14 inches in depth.

The top frame of the basket shall be constructed with two short sides of 2-inch x 2-inch and a single long side of 1-inch x 1-inch, 1/8-inch angle iron.

The basket hangers shall be constructed of 2-inch x 1/4-inch iron bars.

The bottom frame shall be constructed of 1-inch x 1/4-inch iron bar of 1/4-inch plate with center 3 inches removed.

The sides of the inlet basket shall be a minimum 1/4-inch diameter iron rods or equivalent. A minimum of 14 rods shall be welded in place between the top frame/basket hanger and the bottom frame.

Fabric Placement

The filter fabric shall be pushed down and formed to the shape of the basket. The sheet of fabric shall be large enough to be supported by the basket frame when holding sediment and extend at least 6 inches past the frame. Slits shall be cut in the fabric near the top of the

frame for high-flow events, as shown in the drawings. The inlet grate shall be placed over the basket/frame to serve as a fabric anchor.

Fabric Specifications

The filter fabric shall meet the following specifications:

Grab strength:	100 lb. minimum in any principal direction (ASTM D 4632)
Puncture Strength:	Minimum 200 psi (ASTM D 4833) The fabric shall have an opening such that 15% by weight of soils will pass through.
Water Flow Rate	Approximately 120 gal/min/ft^2
Ultraviolet Ray Inhibitors and Stabilizers	Should provide an expected useable life comparable to the anticipated construction period, at least 50% after 500 hours (ASTM D 4355).

F. Inspection and Maintenance

1. Drop inlet insert baskets should be inspected at least once every 14 calendar days and within 24 hours of the end of a storm event of 0.5 inches or greater; or at a minimum of once every seven (7) calendar days. Repair or replacement should be made immediately.
2. Sediment deposits should be removed after each storm event and no later than at such time as deposits reach one third the depth of the basket.

G. Corresponding Technical Specification (Refer to Appendix C)

Item No. 4521 Drop Inlet Insert Baskets

DROP INLET INSERT BASKET

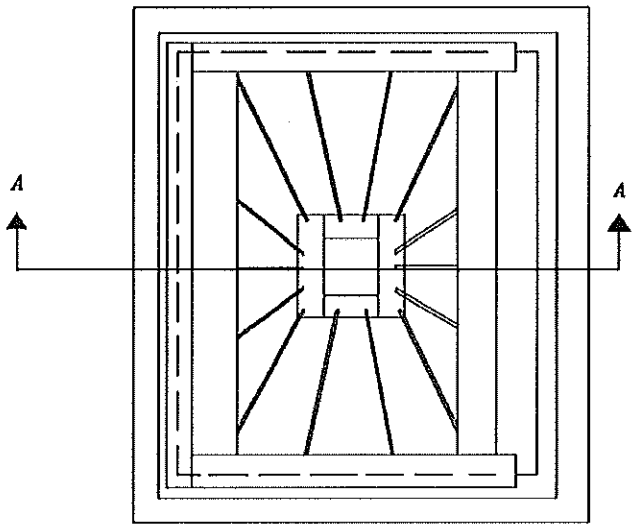

PLAN

(WITH FILTER FABRIC AND GRATE REMOVED)

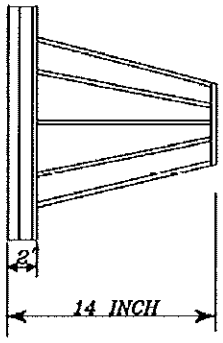

SIDE VIEW

(BASKET ONLY)

* MAY BE DECREASED IF INLET IS OF INSUFFICIENT DEPTH.

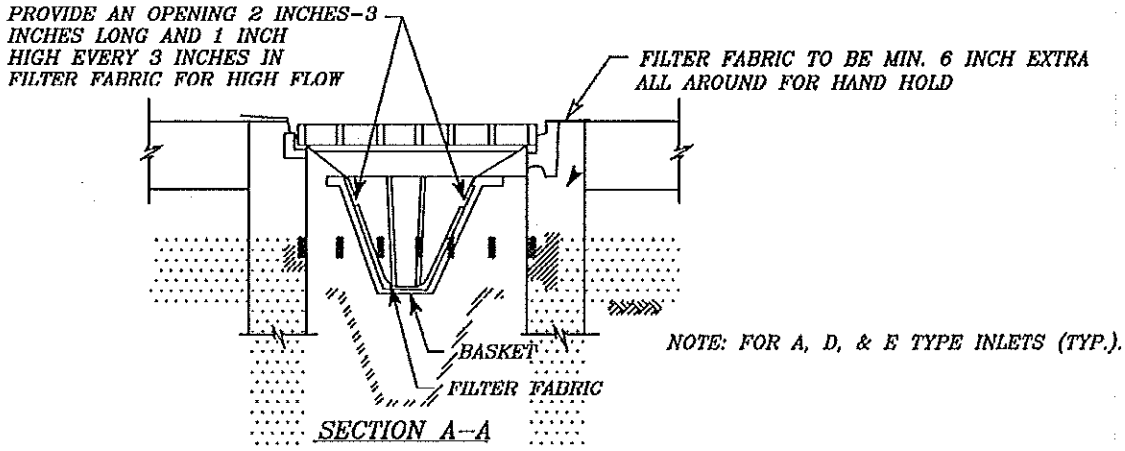

NOTE: FOR A, D, & E TYPE INLETS (TYP.).

Not to Scale

DIB

FIGURE 4.5-3a
BMP 4521
DROP INLET BASKET (DRAWING A)

DROP INLET INSERT BASKET

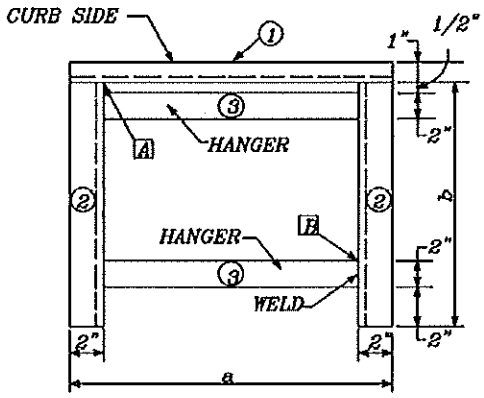

PLAN

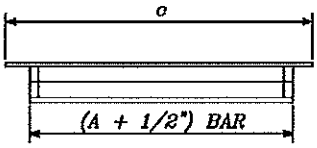

FRONT VIEW

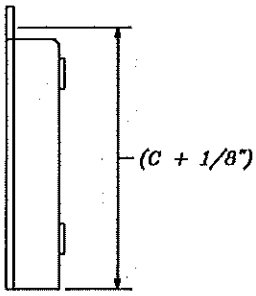

SIDE VIEW

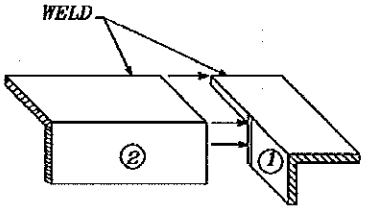

CONNECTION – A
TOP FRAME

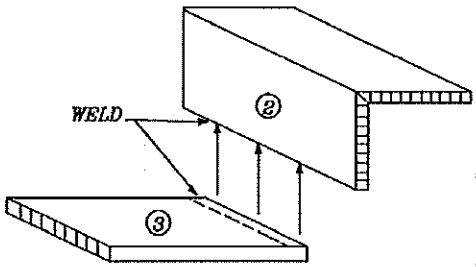

CONNNECTION – B
BASKET HANGER
TO TOP FRAME

BAR SCHEDULE

NO.	SNAPS	SIZE	THICKNESS	LENGTH*	QUANTITY
1	ANGLE	1"X1"	1/8"	a	1
2	ANGLE	2"X2"	1/8"	b	2
3	BAR	2"	1/4"	c	2

*LENGTH AS NECESSARY TO FIT AREA STORM SEWER INLET TYPE TO BE PROTECTED.

Not to Scale

DIB

FIGURE 4.5-3b
BMP 4521 (CONT.)
DROP INLET BASKET (DRAWING B)

DROP INLET INSERT BASKET

BOTTOM FRAME

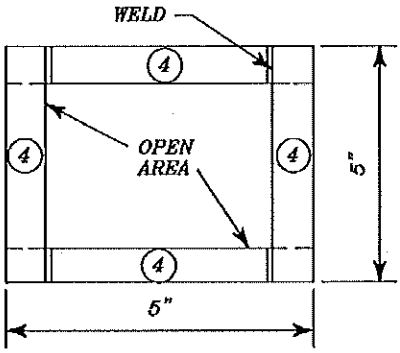

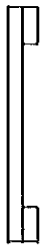

SIDE VIEW

BAR SCHEDULE

NO.	SNAPS	SIZE	THICKNESS	LENGTH	QUANTITY
4	BAR	1"	1/4"	5"	4

ROD PLACEMENT

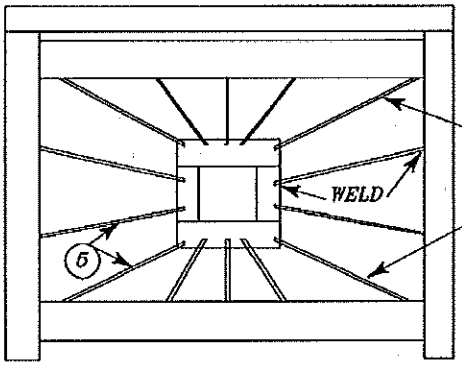

WELD FOUR CORNER BARS FIRST

ROD SCHEDULE

NO.	SHAPE	SIZE	THICKNESS	LENGTH	QUANTITY
5	ROD	1/4" MIN.	–	(CUT TO FIT)	14

Not to Scale

DIB

FIGURE 4.5-3c
BMP 4521 (CONT.)
DROP INLET BASKET (DRAWING C)

4.5.3 Storm Inlet Sediment Traps

A. Definition

A **storm inlet sediment trap** is a temporary sediment trap used to collect sediment around a curb inlet or yard drain.

B. Purpose

To prevent sediment and other pollutants from entering conveyance systems.

C. Conditions Where Practice Applies

At the locations where runoff enters conveyance system structures such as curb inlets and drop inlets.

D. Planning Considerations

Timing The storm inlet sediment trap should be installed before the drainage area is disturbed.

Removal The storm inlet sediment trap should be removed prior to placement of pavement surface at curb inlets. Storm inlet sediment traps used with area inlets and yard drains may be removed once the adjacent disturbed area has been stabilized.

Roadways The storm inlet sediment trap can be used in roadways. Install the trap on the opposite side of the opening and divert water (through a temporary curb opening or other means) from the roadway to the trap to prevent interference with traffic.

E. Design Criteria and Requirements

1. Install either a yard drain inlet or curb drain inlet sediment trap as specified on plans.
2. The depth of the trap should be at least two (2) feet to minimize resuspension of sediment. The minimum surface area of the sediment trap should be 625 square feet for every acre of drainage area. Side slopes should be 2:1 or flatter.

F. Inspection and Maintenance

Inspect sediment traps at least once every 14 calendar days and within 24 hours of the end of storm event of 0.5 inches or greater; or at a minimum of once every seven (7) calendar days. Repair or replace damaged trap components immediately to restore the requirements of this item.

Remove sediment deposit and restore traps to original dimensions when the sediment has accumulated to one-half the design depth of the trap or one foot, whichever is less.

G. Corresponding Technical Specification (Refer to Appendix C)

Item No. 4531 Storm Inlet Sediment Trap

STORM INLET SEDIMENT TRAPS

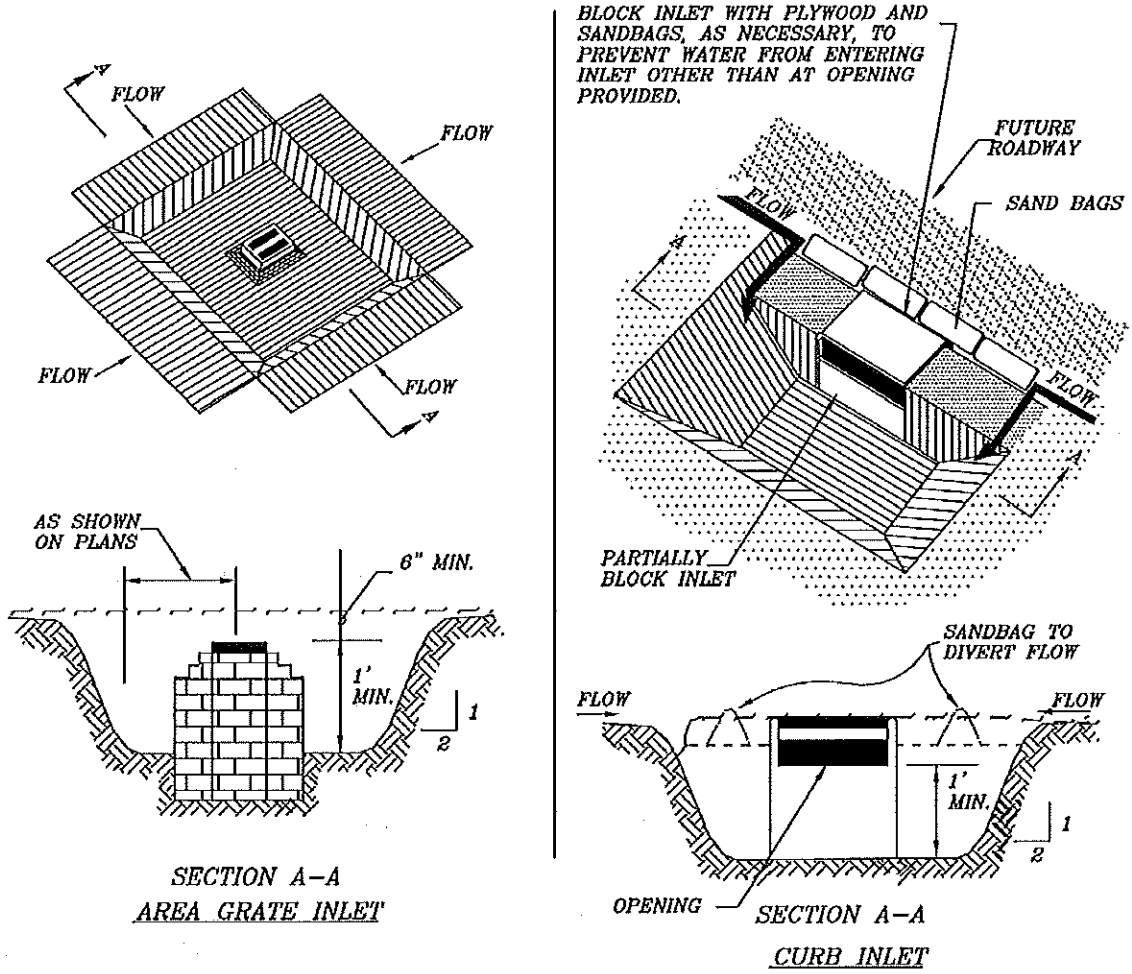

NOTE: WHERE CURB IS IN PLACE, PROVIDE A 1' WIDE OPENING IN THE CURB, OR USE A SANDBAG DAM TO FORCE WATER OVER THE CURB TO THE TRAP.

Not to Scale

General Notes:

1. Install either a grate inlet or curb inlet sediment trap as shown by the construction drawings.
2. The limits of excavation shall be as shown by the construction drawings.
3. Side slope shall be 2:1, or flatter.
4. Maintain a minimum of 1 foot measured vertically from the bottom of excavation for inlet opening.
5. When the inlet is in a roadway, install the trap on the opposite side of the opening and divert water from the roadway to the trap.

IST

FIGURE 4.5-4
BMP 4531
STORM INLET SEDIMENT TRAPS

4.6 BEST MANAGEMENT PRACTICES FOR TRAPPING SEDIMENT DURING SITE DEWATERING

Pumping of suspended or resuspended sediment can cause substantial amounts of pollutants to leave a construction site and enter lakes, streams, and wetlands.

Water pumped from the site should be treated by one of the following:

Dewatering settling basins (Section 4.6.1)

Portable Sediment tank (Section 4.6.2)

Sediment sump pit (Section 4.6.3)

Dewatering bag (Section 4.6.4)

4.6.1 Dewatering Settling Basins

A. Definition

A **dewatering settling basin** is a temporary basin designed and constructed to control sediment contained in water pumped in the process of dewatering a site.

B. Purpose

To detain sediment-laden discharge from dewatering a site for sufficient time to allow the majority of the sediment to settle out.

C. Design Criteria and Requirements

Basin Area The minimum area of the settling basin in square feet shall be determined as shown below where the peak discharge is the flow into the basin based on the 2-year storm

Area basin (ft^2) = 240 x peak discharge (cfs)

Basin Structure

The basin shall consist of an excavated basin and a filter fabric fence or a reinforced filter fabric barrier. The basin shall be constructed and maintained in accordance with the following practices:

4.2.1 Filter Fabric Fences
4.3.1 Reinforced Filter Fabric Barrier
4.3.2 Sediment Traps
4.3.3 Sediment Basins

Outlet Protection

The basin shall discharge to a vegetated or otherwise stabilized area.

D. Maintenance

The dewatering settling basin shall be maintained at all times the site is being dewatered.

E. Corresponding Technical Specifications (Refer to Appendix C)

Item No. 4211	Filter Fabric Fences
Item No. 4311	Reinforced Filter Fabric Barrier
Item No. 4321	Stone Outlet Sediment Trap
Item No. 4322	Excavated Earth Outlet Sediment Trap
Item No. 4323	Embankment Earth Outlet Sediment Trap

Item No. 4331 Sediment Basin with Pipe Outlet
Item No. 4332 Sediment Basin with Stone Outlet

4.6.2 Portable Sediment Tank

A. Definition

A portable **sediment tank** is a fabricated tank constructed from steel drums or other type of tank used to trap and filter sediment from water pumped from excavated areas.

B. Purpose

A portable sediment tank traps and retains sediment from water being pumped from excavated areas.

C. Conditions Where Practice Applies

Portable sediment tanks are generally used to treat water from deep excavations where space is limited.

D. Design Criteria and Requirements

The location of the portable sediment tank should be convenient for clean out and disposal of the trapped sediment and should minimize the interference with construction activities. The size of the tank can be estimated from the formula indicated below where the pump discharge is the flow pumped into the tank.

Storage (cubic foot) = 16 x pump discharge (gallons per minute).

The attached drawing provides an illustration of a portable sediment tank. Alternative container designs can be used if the storage volume is adequate.

If recycled 55-gallon steel drums are used, they must be made free of chemical contamination, prior to use.

E. Inspection and Maintenance

Inspection should be made periodically during pumping and after each pumping. The tank should be cleaned out when one-third of the portable sediment tank is filled with sediment. Sediment collected in the tank should be disposed of at an approved site in a manner that will not contribute to additional sedimentation.

F. Corresponding Technical Specifications (Refer to Appendix C)

Item No. 4621 Portable Sediment Tank

PORTABLE SEDIMENT TANK

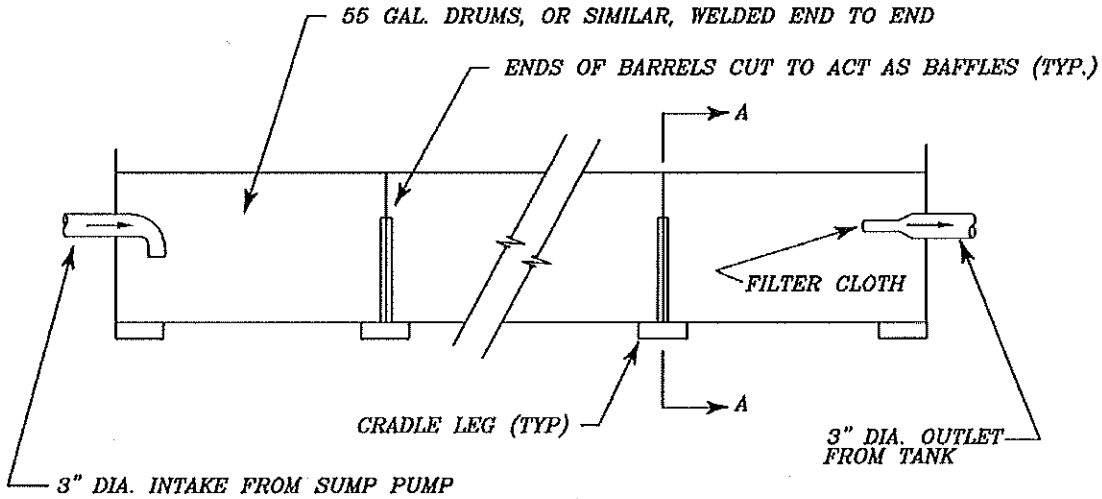

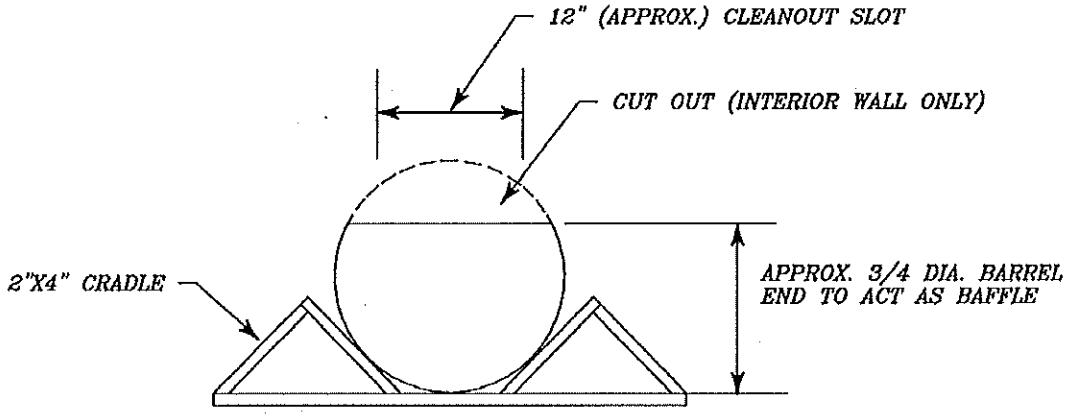

SECTION A–A

Not to Scale

General Notes:

1. Steel drums or other type of tanks may be used, providing that the volume requirements are met.
2. Inspection shall be made after each pumping, and when one-third (1/3) of the portable sediment tank is filled with sediment, clean out the tank.
3. Sediment collected in the tank to be disposed of at an approved site, as directed by the Owner.
4. The portable sediment tank to be removed when the construction is completed.

ST

FIGURE 4.6-1
BMP 4621
PORTABLE SEDIMENT TANK

4.6.3 Sediment Sump Pit

A. Definition

A **sediment sump pit** is a temporary pit with a discharge standpipe which is constructed to trap and filter sediment from water pumped from excavated areas.

B. Purpose

A sediment sump pit collects water retained in excavated areas and removes sediment before the water is pumped from the site.

C. Conditions Where Practice Applies

Sump pits are constructed for collecting water during construction and are particularly useful during excavation for building foundations.

D. Design Criteria and Requirements

A perforated standpipe made from 12- to 24-inch diameter corrugated steel pipe or PVC pipe should be placed in the center of the pit to collect filtered water. The standpipe should extend 12 to 18 inches above the lip of the pit. A base of two-inch (2-inch) aggregate shall be placed in the pit to a depth of 12 inches. The pit surrounding the standpipe should be backfilled with two-inch (2-inch) aggregate after installing the standpipe. Discharge of water pumped from the standpipe shall be conveyed to a sediment trapping device such as a rock berm, brush berm, stone outlet structure, sediment trap, sediment basin, or other appropriate device or to an area protected by any of these devices. The number of sump pits and their locations shall be determined by an engineer.

E. Inspection and Maintenance

Sediment sump pits should be inspected daily during periods of pumping. Sediment sump pits may be used for excavation pumpage with minimal maintenance. Sediment deposits in standpipe may limit effectiveness and need to be removed. The sites of sump pits should be restored to stabilized condition when the construction is complete.

F. Corresponding Technical Specifications (Refer to Appendix C)

Item No. 4631 Sediment Sump Pit

SEDIMENT SUMP PIT

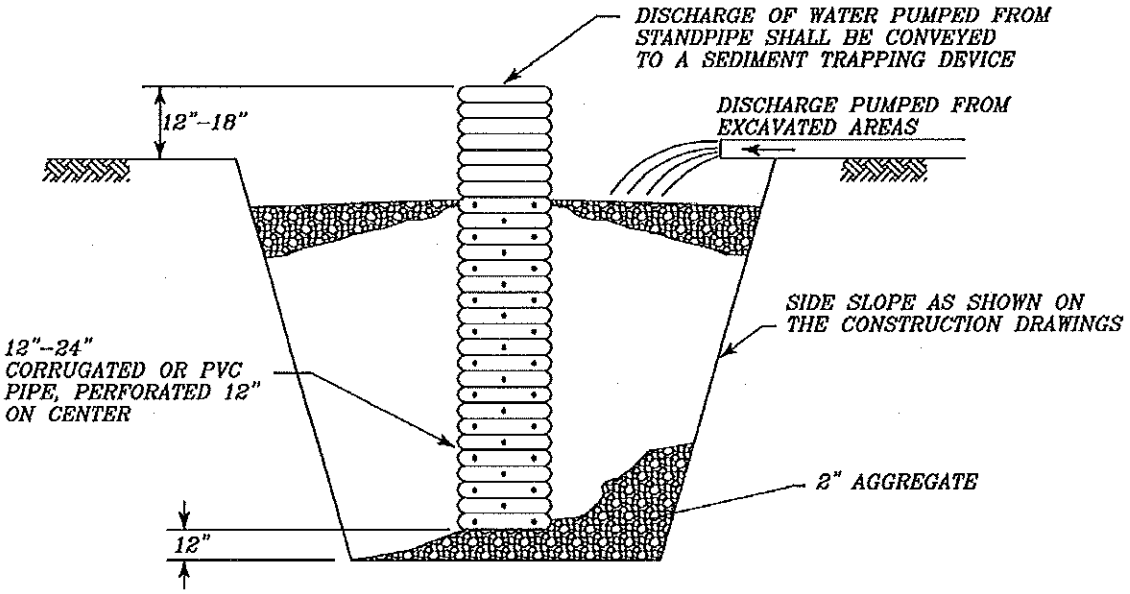

Not to Scale

General Notes:

1. Dimensions as shown on construction drawings.
2. The standpipe should be constructed by perforating a 12" - 24" diameter corrugated or PVC pipe.
3. The standpipe should extend 12" - 18" above the lip of the pit.
4. Discharge of water pumped from the standpipe shall be conveyed to a sediment trapping device such as a rock berm, brush berm, stone outlet structure, sediment trap, or sediment basin, or to an area protected by any of these devices.
5. The sites of sump pits shall be restored to a stabilized condition when construction is completed.
6. Maintenance will be performed as needed.

SSP

FIGURE 4.6-2
BMP 4631
SEDIMENT SUMP PIT

4.6.4 Dewatering Bag

A. Definition

A **dewatering bag**, also referred to as a **gravity bag**, typically is a square or rectangular device made of non-woven geotextile fabric that filters the sediment contained in pumped water. Untreated water is pumped into one side of the bag and seeps through the bottom and sides of the bag.

B. Purpose

To filter and collect sediment (gravel, sand and silt) while dewatering a site.

C. Design Criteria and Requirements

A secondary filter, such as a rock filter bed, is placed beneath and beyond the edges of the bag to increase filtration efficiency.

When installing the dewatering bag on a slope, care should be taken to minimize erosion on the receiving field. In addition, the flow from the dewatering bag shall be discharged to a vegetated or otherwise stabilized area.

The dewatering bag size should be chosen based on the type and amount of sediment discharged into the bag, the type of ground, rock or other substance under the bag, and the degree of the slope on which the bag lies.

D. Maintenance

Inspection of the flow conditions, bag condition, bag capacity, and the secondary barrier should be made periodically during pumping and after each pumping. The dewatering bag shall be replaced when sediment has reduced flow rate to an impractical rate or it no longer can efficiently filter sediment. When construction is completed or the bag is replaced, remove and dispose of the bag offsite or onsite as directed by the Owner.

E. Corresponding Technical Specifications (Refer to Appendix C)

Item No. 4641 Dewatering bags

DEWATERING BAG

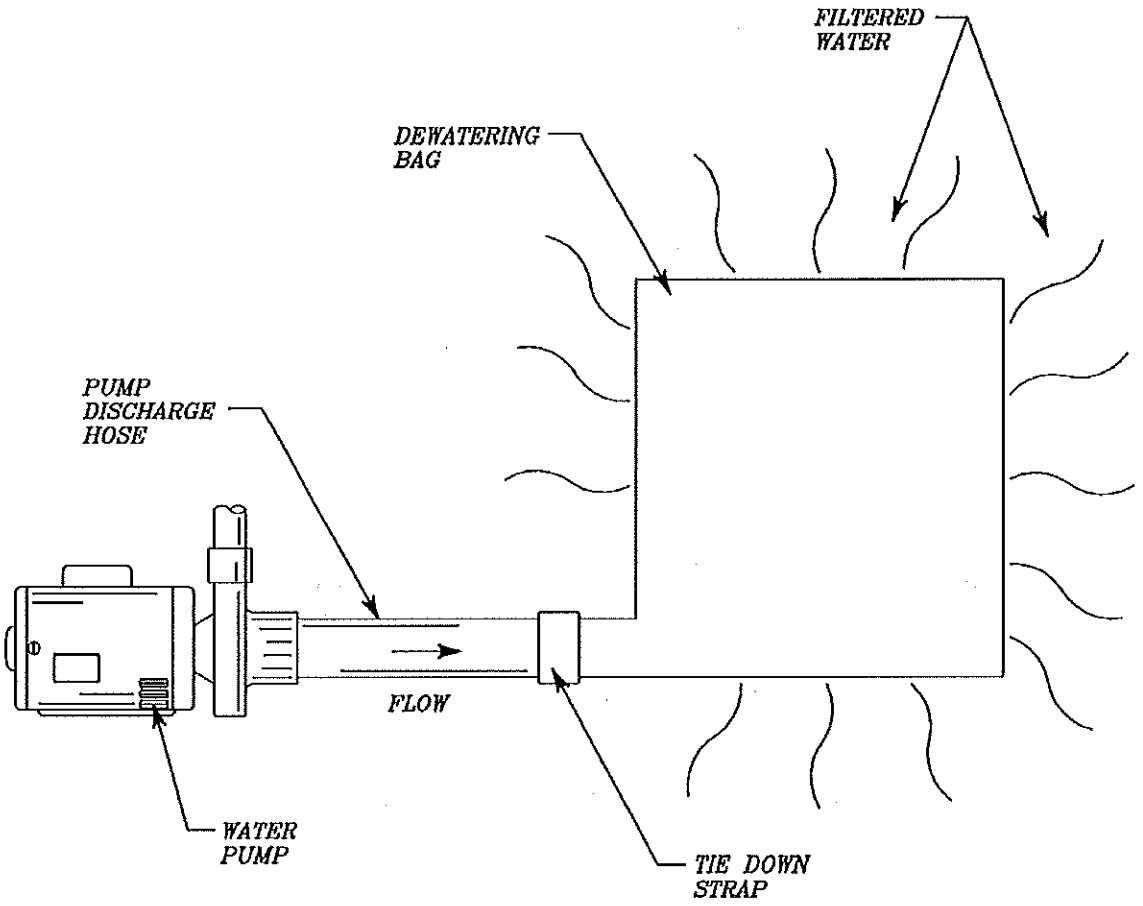

Not to Scale

General Notes:

1. When installing the dewatering bag on a slope, care should be taken to minimize erosion on the receiving field.
2. When sediment has reduced flow rate to impractical levels, replace the dewatering bag.
3. Sediment collected in the bag shall be disposed offsite or onsite as directed by the Owner. Dispose in a manner that does not contribute to additional sedimentation.
4. The dewatering bag shall be removed when construction is completed.

DB

FIGURE 4.6-3
BMP 4641
DEWATERING BAG

4.7 BEST MANAGEMENT PRACTICES FOR PREVENTING TRACKING

Sediment reaching streets generally has a clear path of conveyance to lakes, streams, and wetlands. Control of this source of pollutants is approached in two ways. First, best management practices are identified to minimize the amount of sediment being tracked onto streets. Second, cleanup of the sediment that reaches the street is required.

Required elements:

- Each site should have graveled roads, access drives, and parking areas of sufficient width and length to prevent sediment from being tracked onto public and private roadways.
- Sediment stuck to vehicle tires, axles, and other under carriage components should be removed from vehicles before they exit the construction site.
- Any sediment reaching a public or private road should be removed by street cleaning (not flushing) before the end of each workday.
- If the site is one acre or less and construction of stabilized access road is not feasible, use of street cleaning, such as sweeping or vacuuming, is an acceptable alternative to constructing a stabilized access road.

The section contains the design criteria and requirements for temporary gravel site roads and parking areas and street cleaning.

4.7.1 Stabilized Access Roads and Parking Areas

A. Definition

A **stabilized access road and parking area** is a gravel-stabilized pad located at points of vehicular access and parking on the construction site.

B. Purpose

To reduce the amount of sediment transported onto public roads.

C. Conditions Where Practice Applies

At access points to the construction sites.

D. Planning Considerations

The amount of sediment being transported from the site can also be reduced by using other best management practices.

E. Design Criteria and Requirements

Timing	The stabilized access shall be installed as soon as practicable before the start of site disturbance.
Removal	The stabilized access shall remain in-place and be maintained until the disturbed area is stabilized by permanent best management practices.
Location	The stabilized access shall be located to provide maximum use by all construction vehicles.

Dimensions The stabilized access shall consist of at least 8 inches of 2 to 3 inch aggregate or crushed concrete; 50 feet in length or the distance from the road to the specific construction area, whichever is less; and at least 7 feet in width. The width shall be 14 feet if it is necessary to have vehicles pass on the site.

Stabilized Access Pad Alternative Materials

Suggested materials for use in construction of access pads shall include the following:

Gravel Coarse gravel of 2-inch or larger aggregate applied on top of existing soil in an application thickness of at least 8 inches. This depth should be monitored and maintained throughout construction. A separation geotextile fabric should be provided as a permeable separator to prevent mixing of coarse aggregate with underlaying soil.

Cement Stabilized Soil

Compacted, cement stabilized soil, limestone aggregate or other fill material in an application thickness of at least 8 inches.

Wood Mats
Mud Mats Oak or other hardwood timbers placed edge to edge and across support wooden beams which are placed on top of existing soil in an application thickness of at least 6 inches.

Steel Mats Perforated mats placed across perpendicular support members.

Sediment Removal Techniques

Suggested methods for removal of large accumulations of sediment on vehicle tires, axles, and other undercarriage components should include the use of high pressure water hoses to wash off under carriages. Water and sediment should be filtered to avoid sediment from running into watercourses, wetlands, or storm water conveyance systems.

F. Inspection and Maintenance

The stabilized access shall be inspected daily. Areas not meeting the design criteria and requirements shall be repaired or replaced immediately.

G. Corresponding Technical Specification (Refer to Appendix C)

Item No. 4711 Stabilized Construction Exit

STABILIZED CONSTRUCTION EXIT

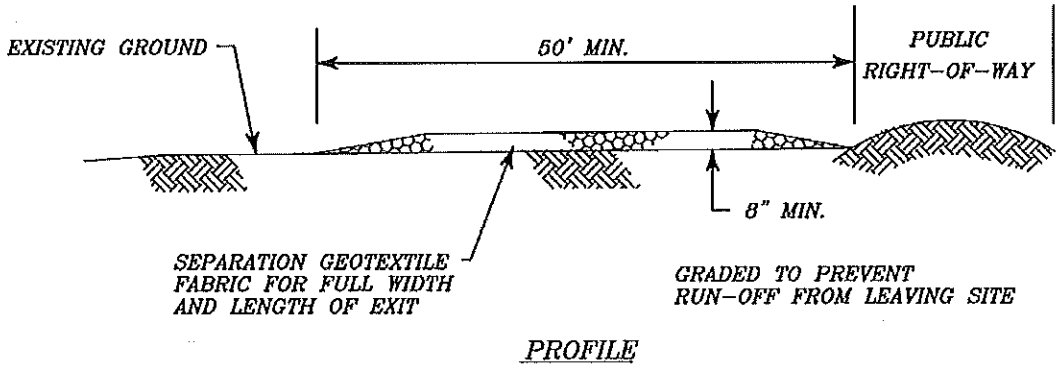

PROFILE

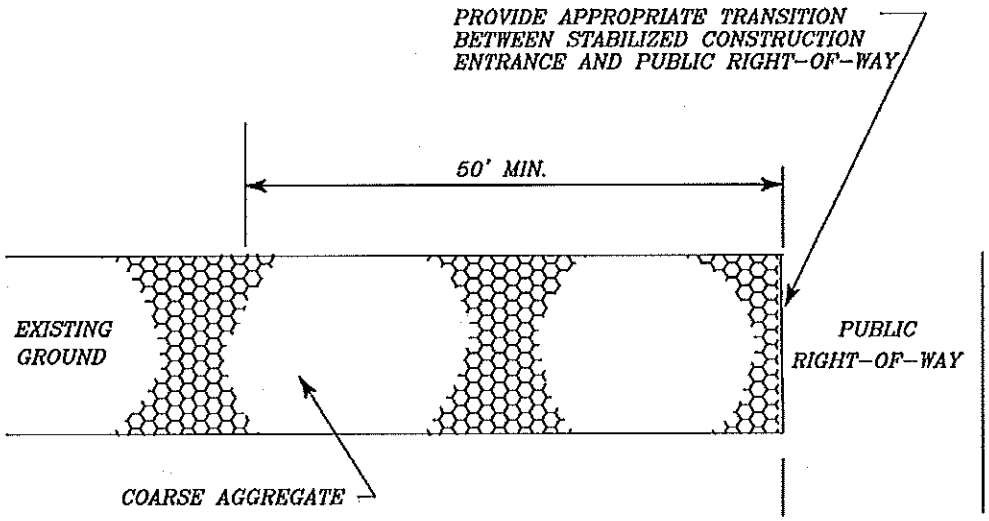

PLAN VIEW

Not to Scale

General Notes:

1. Length shall be as shown on the construction drawings, but not less than 50 feet.
2. Thickness shall not be less than 8 inches.
3. Width shall be not less than full width of all points of ingress or egress.
4. Stabilization for other areas shall have the same aggregate thickness and width requirements as the stabilized construction exit, unless otherwise shown on the construction drawings.
5. Stabilized area may be widened or lengthened to accommodate a truck washing area, when shown on the construction PLANS. An outlet sediment trap must be provided for the truck washing area.

SC

FIGURE 4.7-1
BMP 4711
STABLIZED CONSTRUCTION EXIT

4.7.2 Street Cleaning

A. Definition

Street cleaning is the removal of tracked sediment from public or private roads.

B. Purpose

To reduce the amount of sediment tracking into roadways from construction traffic.

C. Conditions Where Practice Applies

On streets adjacent to the construction site. May be used on small sites where stabilized construction exit is not feasible.

D. Planning Considerations

Use street cleaning to remove sediment that has tracked onto public and private roadways from the construction area. Street cleaning is to be used to supplement stabilized access road and parking areas. For construction sites with areas of one acre or less, street cleaning can be used in lieu of constructing the stabilized exit. Use of other best management practices is required to reduce the amount of sediment being transported from the site during period of rains and non-working hours. The frequency of cleaning will depend on the frequency and intensity of construction activity, vehicle movement, and storm events.

E. Design Criteria and Requirements

Timing	Use daily during construction.
Location	Clean all streets adjacent to construction site where sedimentation may have been tracked.
Constraints	To supplement stabilized access roads and parking areas. If construction site is one acre or less, street cleaning may be used in lieu of stabilized exit. Sweeping should avoid generating dust to minimize airborne particles. Sweeping should include capture and proper disposal of swept debris.
Equipment	For small areas, manually clean the street with a shovel or broom. For larger areas use a vacuum sweeper. Washing or flushing of the street is not allowed.

F. Inspection and Maintenance

Street must be cleaned daily before the end of the workday. If excess sediments have tracked onto the streets, or if rain is expected, clean the street as often as necessary to keep the street clean at all times. Remove and dispose of sediments properly. Disposal of sediments into inlets is illegal and expressly prohibited.

G. Corresponding Technical Specification (Refer to Appendix C)

Item No. 4721 Street Cleaning

4.8 OTHER SOURCE CONTROLS ON CONSTRUCTION PROJECTS

4.8.1 General Source Controls

A. Definition

General source controls include management techniques for minimizing nonpoint source pollution related to erosion and nonerosion sources on construction sites.

B. Purpose

To reduce the availability of construction-related pollutants which can contaminate runoff water and, where runoff contamination cannot be avoided, to retain pollutants and polluted water on the site insofar as possible.

C. Conditions Where Practice Applies

This practice applies to all construction projects. The size and complexity of the construction site determine the level of planning and management necessary to control pollution adequately.

D. Planning Considerations

Construction activities, by their nature, create many sources of potential pollutants which can contaminate runoff and affect the quality of downstream receiving waters. Accelerated erosion and sedimentation caused by land-disturbing activities is one of the major pollution problems caused by construction. Sections 4.1 to 4.7 address specific best management practices (BMP) that address sediment problem areas on construction sites. This section will present general construction management practices that can also reduce the potential for erosion and sedimentation.

Nonerosion pollutants that may be associated with construction activities will contaminate runoff water when they are not properly managed. These include fertilizers, pesticides, gasoline, oils, grease, paints, cements, and solvents. Nontoxic solid wastes such as paper and cardboard can be potential pollutants when they are washed into streams and lakes in large quantities.

The best way to prevent nonpoint source pollution on construction sites is to use "good housekeeping" practices to keep the site in a neat and orderly condition. An overall plan should be outlined to include practices to retain runoff and to deal with toxic substances and materials.

E. Requirements

Specific elements for construction site housekeeping and good management are described below:

Erosion and Sedimentation Control Plan

Erosion and sedimentation controls are effective in controlling many other nonpoint source pollutants associated with construction activities. Development and implementation of a good erosion and sedimentation control plan is a key factor in controlling nonpoint source pollutants.

Topsoiling

When topsoiling, maintain erosion and sedimentation control systems, such as dikes, swales, grade stabilization structures, waterways, and sediment basins operational. Maintain grades which have been previously established on the areas to be topsoiled.

Protection of Trees

Protect trees designated to remain in construction areas. Heavy equipment, vehicular traffic, and stockpiles of construction materials, including topsoil, are not permitted within the dripline of any tree to be retained. Avoid grading, cutting or filling within tree drip lines. Tree trunks, exposed roots, and limbs of trees designated to be retained, which are damaged during construction operations, should be cared for by a forester or licensed tree expert. Specimen trees should be boxed or fenced. Protection of trees may need to comply with local ordinances.

Dust Control

Control dust blowing and movement on construction sites and roads to prevent loss of soil surface, to reduce onsite and offsite damage, to prevent health hazards, and to improve traffic safety.

Control dust blowing by utilizing one or more of the following methods. Dust control methods shall be implemented immediately whenever dust can be observed blowing on the project site.

a. Mulches bound with natural or chemical binders such as Curasol, Terratack, or equal.
b. Temporary vegetative cover.
c. Spray-on adhesives on mineral soils.
d. Tillage to roughen surface and bring clods to the surface.
e. Irrigation by water sprinkling.
f. Barriers using solid board fences, snow fences burlap fences, crate walls, hay bales, or similar materials.

Equipment Maintenance and Repair

Maintenance and repair of construction machinery and equipment should be confined to areas specifically designated for that purpose. Such designated areas should be located and designed so that oils, gasoline, grease, solvents, and other potential pollutants cannot be washed directly into receiving streams or storm water conveyance systems. These areas should be provided with adequate waste disposal receptacles for liquid as well as solid waste. Maintenance areas should be inspected and cleaned daily.

On a construction site where designated equipment maintenance areas are not feasible, care should be taken during each individual repair or maintenance operation to prevent potential pollutants from becoming available to be washed into streams or conveyance systems. Temporary waste disposal receptacles should be provided.

Waste Collection and Disposal

A plan should be formulated for the collection and disposal of waste materials from a construction site. Such a plan should designate locations for trash and waste receptacles and establish a collection schedule. Methods for ultimate disposal of waste should be specified and carried out in accordance with applicable local, state, and federal health and safety regulations. Special provisions should be made for the collection and disposal of liquid wastes and toxic or hazardous materials.

Receptacles and other waste collection areas should be kept neat and orderly to the extent possible. Waste should not be allowed to overflow its container or accumulate

for excessively long periods of time. Trash collection points should be located where they will least likely be affected by concentrated storm water runoff.

Washing Areas

Vehicles such as cement or dump trucks and other construction equipment should not be washed at locations where the runoff will flow directly into a watercourse or storm water conveyance system. Areas should be designated for washing vehicles. These areas should be located where the wash water will spread out and evaporate or infiltrate directly into the ground, or where the runoff can be collected in a temporary holding or seepage basin. Wash areas should have gravel or rock bases to minimize mud generation.

Storage of Construction Materials, Chemicals, Etc.

Sites where chemicals, cements, solvents, paints, or other potential water pollutants are to be stored, should be isolated in areas where they will not cause runoff pollution.

Toxic and/or hazardous chemicals and materials, such as pesticides, paints, and acids should be stored in accordance with manufacturers' guidelines. Groundwater resources should be protected from leaching by placing a plastic mat, packed clay, tarpaper, or other impervious materials on any areas where toxic and/or hazardous liquids are to be opened and stored.

Spills of toxic and/or hazardous substances are to be cleaned and treated according to local, state and federal regulations.

Demolition Areas

Demolition projects usually generate large amounts of dust with significant concentrations of heavy metals and other toxic pollutants. Dust control techniques should be used to limit the transport of the airborne pollutants. However, water or slurry used to control dust should be retained on the site and not be allowed to run directly into watercourses or storm water conveyance systems.

Sanitary Facilities

All construction sites should be provided with adequate sanitary facilities for workers in accordance with applicable health regulations.

Pesticides

Pesticides used during construction should be stored and used in accordance with manufacturers' guidelines and with local, state and federal regulations. Overuse should be avoided and great care should be taken to prevent accidental spillage. Pesticide containers should never be washed in or near flowing streams or storm water conveyance systems. Certain facilities may be subjected to specific regulations. For example, Texas Public School Districts are required to have Integrated Pest Control Management

For more information on pesticides, contact the departments listed below:

Texas Structural Pest Control Board
William P. Hobby Building
333 Guadalupe, Suite I-530
Austin, Texas 78701
Phone: (512) 305-8250

Fax: (512) 305-8253
Website: http://www.spcbtx.org

Texas Cooperative Extension Service
The Texas A&M University System
112 Jack K. Williams
Administration Building
7101 TAMU
College Station, TX 77843-7101
Phone: (979) 845-7967
Website: http://texasextension.tamu.edu.

Department of Agriculture
P. O. Box 12847
Austin, TX 78711
Phone: (512) 463-7476
Fax: (512) 463-1104
Website: http://www.agr.state.tx.us

F. *Inspection and Maintenance*

Inspect general source controls as detailed above.

G. Corresponding Technical Specifications (Refer to Appendix C)

Item No. 4811 General Source Controls

4.8.2 Temporary Vehicle and Equipment Fueling Area

A. Definition

Temporary vehicle and equipment aboveground fueling storage tank, which will be on site for more than 48 hours, should be protected from leakage and spilling of fuel.

B. Purpose

To contain accidental spilling of fuel, allowing for the clean up of spill once it happens, and to prevent spilled fuel from running into unprotected area. There is no provision for containment of fuel spilled due to major catastrophic failure of the tank. In those cases, refer to the rules and regulations of local, state, and federal statutes, regulations and ordinances for protection and clean up requirements.

C. Conditions Where Practice Applies

Temporary fueling area is to be used where aboveground fuel storage tank is used at construction site.

D. Planning Considerations

1. Unless necessary, do not use storage tank on site. Locate the tank offsite in an approved storage area to minimize the risk of contaminating the site.
2. When storage tank is needed at the site, locate the tank in a temporary fueling area. The Contractor should prepare spill response and containment procedures to be implemented in the event of a materials spill. Spill containment equipment appropriate to the size of operation is to be located in close proximity to the fueling area. Such equipment may include, but not limited to, suitable waste containers for fuel, drip pans, booms, inlet covers, or absorbent.

E. Design Criteria and Requirements

Installation Do not locate fuel area in or near a channelized flow area or close to a storm sewer conveyance system. Sufficient space must be provided to allow installation of other erosion and sediment controls to protect those areas.

Provisions Protection of fuel areas is by means of:

1. Providing double containment for fuel tanks
2. Installation of curb and overspill pan to contain spills, overspills, and leaks.
3. Liners to prevent spilled fuel from percolating through the soil.

Aboveground Storage Tank

Tank Assembly: Must be listed with UL 1709 and UL2085.

Inner Steel Storage Tank: Follow UL 142, with minimum thickness of 1/8-inch all steel welded construction.

Tank Encasement: Either concrete or steel to provide a minimum of 110 percent containment of the inner tank capacity. Provide 5-gallon overspill containment tank for refueling.

Dispenser Pump: For submersible pump, UL listed emergency shut-off valve, with a shear section, is to be installed at each dispenser.

Representative Manufacturers: Convault, Fireguard, Ecovault, SuperVault, or as approved by local Fire Department.

Concrete 4,000 psi at 28 days

Aggregates Coarse aggregate shall consist of crushed stone, gravel, crushed blast furnace slag, or a combination of these materials. Aggregate shall be composed of clean, hard, durable materials, free from adherent coatings, salt, alkali, dirt, clay, loam, shale, soft or flaky materials, or organic and injurious materials.

Geotextile Fabric

Provide geotextile fabric in continuous rolls of longest practical length under coarse aggregate.

Removal Dispose fueling area after the fuel storage tank has been removed. Inspect the topsoils in the vicinity of the fueling area for evidence of fuel leaks. If pollutants have been released, the soil should be removed and properly disposed offsite.

F. Inspection and Maintenance

1. Inspect stabilized at least once every 14 calendar days and within 24 hours of the end of a storm event of 0.5 inches or greater; or at a minimum of once every seven (7) calendar days. Provide periodic top dressing with additional coarse aggregate to maintain the required depth. Repair and clean out damaged control measures used to trap sediment.

2. Inspect fuel tank foundation's bermed area at least once every 14 calendar days and within 24 hours of the end of a storm event of 0.5 inches or greater; or at a minimum of once every seven (7) calendar days. Visually examine storm water contained in the tank's bermed foundation area for oil sheen or other obvious

indicators of storm water pollution. Properly dispose of the storm water when pollution is present. Record visual examination of storm water discharge.

G. Corresponding Technical Specifications (Refer to Appendix C)

Item No. 4821 Temporary Vehicle and Equipment Fueling Area

TEMP. VEHICLE & EQUIPMENT FUELING AREA

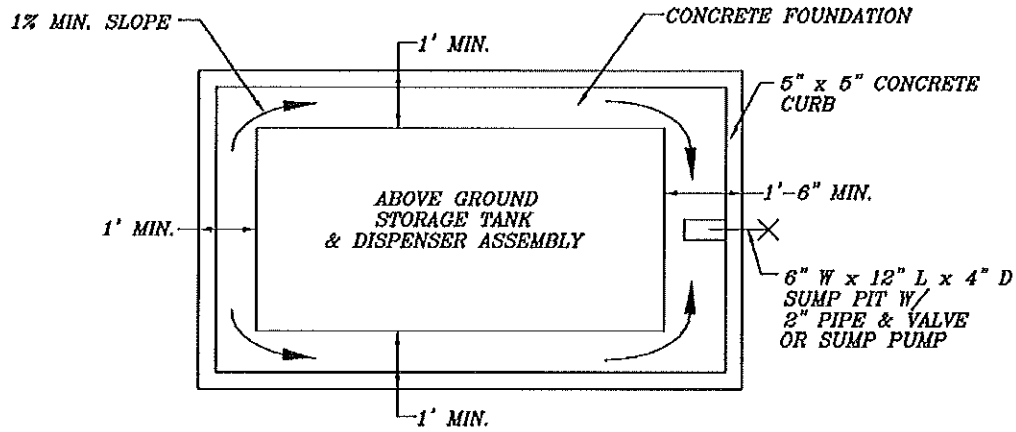

TANK FOUNDATION AREA
N.T.S.

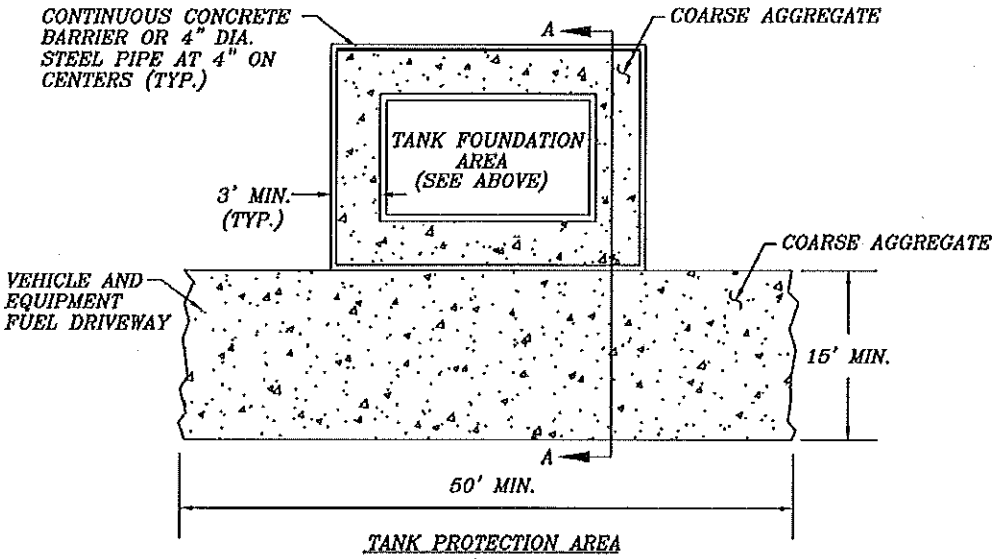

TANK PROTECTION AREA
N.T.S.

General Notes: Not to Scale

1. The size of the tank foundation area depends on the size of above ground storage tank and dispenser assembly.
2. Provide a minimum of 1 foot clearance to the edge of the concrete curb.
3. Provide a minimum slope of 1% toward the sump pit.

TFA

FIGURE 4.8-1a
BMP 4821
TEMPORARY VEHICLE & EQUIPMENT FUELING AREA (DRAWING A)

TEMP. VEHICLE & EQUIPMENT FUELING AREA

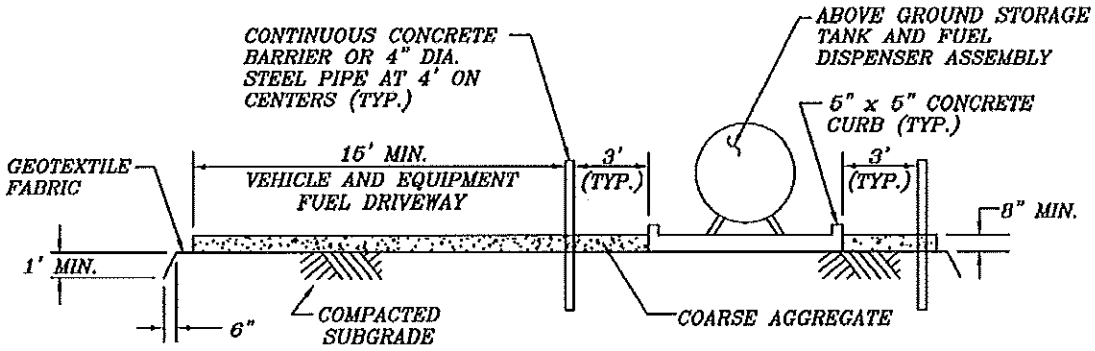

SECTION A–A
N.T.S.

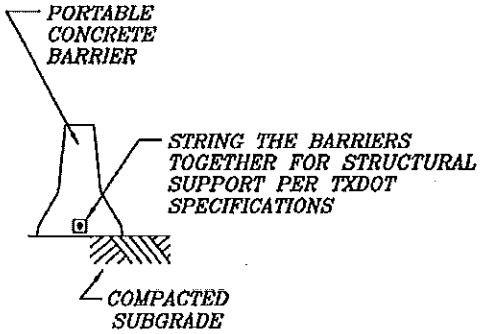

CONCTRETE BARRIER
N.T.S.

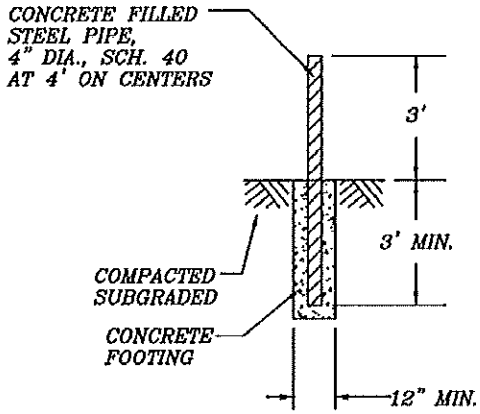

PIPE BOLLARD
N.T.S.

Not to Scale

TFA

FIGURE 4.8-1b
BMP 4821 (CONT.)
TEMPORARY VEHICLE & EQUIPMENT FUELING AREA (DRAWING B)

Appendix 4

Permit No.: _____

City of Rosenberg

LAND DISTURBANCE APPLICATION

2220 4th Street, Rosenberg, Texas 77471
Telephone: 832-595-3500 Fax: 832-595-3501 Inspection Request Line: 832-595-3401
Inspection called in before 5:30 pm will be next day, after 5:30 pm will be two business days

Project Name: _____ **Date of Application:** _____

Flood Zone Type: _____ **BFE (for Zone AE)** _____ **Permit Expiration:** _____

Firm Panel No.: _____ **Firm Panel Date:** _____

Applicant/Operator's Name: _____

Mailing Address: _____

Phone No.: _____ **Fax No.:** _____ **E-Mail:** _____

Contact: _____ **Phone No.:** _____ **E-Mail:** _____

Engineer Name: _____

Mailing Address: _____

Phone No.: _____ **Fax No.:** _____ **E-Mail:** _____

Property Owner Name: _____

Mailing Address: _____

Phone No.: _____ **Fax No.:** _____ **E-Mail:** _____

Location: *For all locations, provide property address or location description and attach a vicinity map.*

	Property Address:	***Location Description:***
1		
2		
3		

Complete the following as appropriate. If Located in a subdivision:

Name of Subdivision: _____

Section No.: _____ ***Block No.*** _____ ***Lot No.*** _____

If not located in a subdivision:

Name & No. of Survey/Abstract: _____

Acreage: _____

Submitted with this Application are the following:

	Construction Drawings		***SWPPP including Operation and Maintenance Requirements***
	Fee		
	Other (please specify) _____		

Rev. 083111-SN

Supply the following information as applicable/available:	
	Building Permit No. (for all development on private property)
	Date of NOI. (for all plans requiring an NPDES or TPDES Construction Permit. NOI must be attached.)
	TCEQ Construction Permit No. (Attach copy of TCEQ Acknowledgement Certification for the TPDES Construction General Permit or an individual permit, if available.)

NOTICE: **This application is required by Chapter 31 of the City of Rosenberg Code of Ordinances governing Storm Water Protection. The applicant hereby agrees to comply with the Code of Ordinances which includes the following conditions:**

1. **This permit expires on the above expiration date.**
2. **Owner will submit renewal application not more than thirty (30) days, nor less than five (5) days, prior to the date of permit expiration. Failure to renew the permit may result in enforcement action including, but not limited to, stop work orders, revocation of certificate of occupancy, money damages, fines, or any combination of administrative, judicial, or criminal penalties.**

The City may revoke this application, if the City Engineer determines that any information on this Land Disturbance Permit application is false. The Applicant must submit a revised application along with the appropriate Land Distrubance Permit Application to correct any errors. This Land Disturbance Permit is effective upon signature by the City's Engineer, or his authorized representative.

Applicant's Signature

Date

Appendix 5

City of Rosenberg

Storm Water Pollution Prevention Plan (SWPPP)

Facility Checklist

Facility Name: Rosenberg Fire Station 2
Address: 5320 Reading Rd

Phone #: (832) 595 3620 Fax #: (832) 595-3622

Date: 1/31/11 Inspector's Name and Title: Darrell Himly Asst. Chief

Building and Grounds Maintenance

Are the following conditions met?	Yes	No	N/A	Comments
Clean up without water using sweeping or wiping	✓			
Spills prevented and cleaned up	✓			
Debris and litter cleaned up and not washed into storm drains	✓			
Detergents not used in steam or pressure washing	✓			
Catch basins and storm drains cleaned regularly	✓			
Soil erosion controlled	✓			
Lawn clippings, trimmings from trees and other landscaping disposed of properly			✓	
Correct types and amounts of fertilizer, herbicides, and/or pesticides for landscaping used			✓	
Overwatering avoided	✓		✓	
Fertilizers, pesticides, or herbicides not applied during rainy weather			✓	

Waste Disposal and Reduction

Trash dumpster lids kept closed	✓			
Dropped trash picked up	✓			
Dumpster areas swept	✓			
Wastes cleaned up with broom instead of water	✓			
Liquid wastes kept out of dumpsters	✓			

Form Updated 12/11/08

Call 832-595-3960 for more information, or go to the City website at www.ci.rosenberg.tx.us

Please record changes to this document in the Updates to Storm Water Pollution Prevention Records.

City of Rosenberg

Are the following conditions met?	Yes	No	N/A	Comments
Hazardous or harmful wastes kept out of dumpsters or trash containers	✓			
Leaking dumpsters fixed	✓			
No wastes are put in storm drains or sewers	✓			
Paper, cans, glass and plastics are recycled	✓			
Smaller volumes of materials and supplies are ordered to avoid waste	✓			
Washable drinking cups are used in the office	✓			
City recycling and waste reduction guidelines are followed	✓			

Equipment Maintenance

Prevention of spills	✓			
Fueling areas covered		✓		
Sweep or use other dry methods rather than hosing down the fuel area for cleaning	✓			
Signs posted warning against "topping off"	✓			
Read and follow the guidelines that apply	✓			
Work area kept clean	✓			
Inspection for leaks, malfunctions, and staining on or around vehicles and equipment	✓			
Oil filters drained before disposal or recycling			✓	
All fluids contained or drained from wrecked vehicles or equipment that has to be replaced			✓	
Cracked batteries stored in a non-leaking secondary container			✓	
Full drip pans or other open containers of used liquids not left sitting around	✓			
Organized inventory of materials maintained	✓			

Form Updated 12/11/08

Call 832-595-3960 for more information, or go to the City website at www.ci.rosenberg.tx.us

Please record changes to this document in the Updates to Storm Water Pollution Prevention Records.

SD-2

City of Rosenberg

Are the following conditions met?	Yes	No	N/A	Comments
Recycling of waste materials (e.g. used oil, spent solvents, batteries) labeled and tracked			✓	
Drip pans used for vehicles and equipment waiting for maintenance	✓			
Parked under cover to prevent exposure to rainfall	✓			
Parts or equipment not washed outside	✓			
Equipment or vehicles washed in designated areas where wash water is released into sanitary sewer system	✓			
Barriers or absorbent pads used to prevent dirty, polluted wash water from entering a storm drain inlet	✓			
Wash water contained and recycled. Wash water does not flow into gutter or storm drain.	✓			
Spills, leaks, wastes or wash water from vehicles or equipment not allowed to enter the storm drain	✓			

Materials Handling and Storage

Handling instructions read and followed for all stored materials	✓			
Storage containers are spill-proof; inspected for leaks and routine maintenance performed	✓			
Storage tanks and piping systems inspected for leaks or failures and routine maintenance performed	✓			
Safeguards (such as berms or secondary containment basins) used against accidental releases of liquids from storage area	✓			

Form Updated 12/11/08

Call 832-595-3960 for more information, or go to the City website at www.ci.rosenberg.tx.us

Please record changes to this document in the Updates to Storm Water Pollution Prevention Records.

City of Rosenberg

Are the following conditions met?	Yes	No	N/A	Comments
Materials stored in appropriate containers	✓			
Stored materials protected from rainwater	✓			
Materials stored indoors and on pallets, if possible	✓			
Materials stored outdoors covered with sheets of plastic or other types of cover			✓	
Hazardous materials stored according to federal, state, and local requirements	✓			

Spill Prevention

Precautions taken to prevent spills	✓			
Sweeping and dry mopping are frequently done to reduce the amount of dirt, fluids, and other residues that accumulate in work areas	✓			
Sweeping and dry mopping are done instead of cleaning up with water whenever possible, especially outside	✓			
Updated spill prevention plan for facility	✓			online
Updated spill cleanup plan for facility	✓			
Spills cleaned up promptly	✓			
Absorbents like sand and special spill cleanup powders on hand to help clean up spills	✓			
Rags kept handy for cleanup	✓			

City of Rosenberg

Storm Water Pollution Prevention Plan (SWPPP)

Facility Checklist

Facility Name: Rosenberg Fire Administration
Address: 1012 Fifth St

Phone #: (832) 595-3600 Fax #: (832) 595-3601

Date: 1/31/11 Inspector's Name and Title: Darrell Himly Asst Chief

Building and Grounds Maintenance

Are the following conditions met?	Yes	No	N/A	Comments
Clean up without water using sweeping or wiping	✓			
Spills prevented and cleaned up	✓			
Debris and litter cleaned up and not washed into storm drains	✓			
Detergents not used in steam or pressure washing			✓	
Catch basins and storm drains cleaned regularly			✓	
Soil erosion controlled	✓			
Lawn clippings, trimmings from trees and other landscaping disposed of properly	✓			
Correct types and amounts of fertilizer, herbicides, and/or pesticides for landscaping used			✓	
Overwatering avoided			✓	
Fertilizers, pesticides, or herbicides not applied during rainy weather			✓	

Waste Disposal and Reduction

Trash dumpster lids kept closed			✓	
Dropped trash picked up	✓			
Dumpster areas swept			✓	
Wastes cleaned up with broom instead of water	✓			
Liquid wastes kept out of dumpsters	✓			

Form Updated 12/11/08

Call 832-595-3960 for more information, or go to the City website at www.ci.rosenberg.tx.us

Please record changes to this document in the Updates to Storm Water Pollution Prevention Records.

City of Rosenberg

Are the following conditions met?	Yes	No	N/A	Comments
Hazardous or harmful wastes kept out of dumpsters or trash containers	✓			
Leaking dumpsters fixed			✓	
No wastes are put in storm drains or sewers	✓			
Paper, cans, glass and plastics are recycled	✓			
Smaller volumes of materials and supplies are ordered to avoid waste	✓			
Washable drinking cups are used in the office	✓			
City recycling and waste reduction guidelines are followed	✓			

Equipment Maintenance

Prevention of spills	✓			
Fueling areas covered			✓	
Sweep or use other dry methods rather than hosing down the fuel area for cleaning			✓	
Signs posted warning against "topping off"			✓	
Read and follow the guidelines that apply			✓	
Work area kept clean	✓			
Inspection for leaks, malfunctions, and staining on or around vehicles and equipment	✓			
Oil filters drained before disposal or recycling			✓	
All fluids contained or drained from wrecked vehicles or equipment that has to be replaced			✓	
Cracked batteries stored in a non-leaking secondary container			✓	
Full drip pans or other open containers of used liquids not left sitting around			✓	
Organized inventory of materials maintained	✓			

Form Updated 12/11/08

Call 832-595-3960 for more information, or go to the City website at www.ci.rosenberg.tx.us

Please record changes to this document in the Updates to Storm Water Pollution Prevention Records.

A-2

City of Rosenberg

Are the following conditions met?	Yes	No	N/A	Comments
Recycling of waste materials (e.g. used oil, spent solvents, batteries) labeled and tracked			✓	
Drip pans used for vehicles and equipment waiting for maintenance			✓	
Parked under cover to prevent exposure to rainfall	✓			
Parts or equipment not washed outside			✓	
Equipment or vehicles washed in designated areas where wash water is released into sanitary sewer system		✓		washed at Fire Station w/ Biodegradeable SOAP
Barriers or absorbent pads used to prevent dirty, polluted wash water from entering a storm drain inlet			✓	
Wash water contained and recycled. Wash water does not flow into gutter or storm drain.		✓		
Spills, leaks, wastes or wash water from vehicles or equipment not allowed to enter the storm drain			✓	

Materials Handling and Storage

Handling instructions read and followed for all stored materials	✓			
Storage containers are spill-proof; inspected for leaks and routine maintenance performed			✓	
Storage tanks and piping systems inspected for leaks or failures and routine maintenance performed			✓	
Safeguards (such as berms or secondary containment basins) used against accidental releases of liquids from storage area			✓	

City of Rosenberg

Are the following conditions met?	Yes	No	N/A	Comments
Materials stored in appropriate containers	✓			
Stored materials protected from rainwater	✓			
Materials stored indoors and on pallets, if possible	✓			
Materials stored outdoors covered with sheets of plastic or other types of cover			✓	
Hazardous materials stored according to federal, state, and local requirements	✓			

Spill Prevention

Precautions taken to prevent spills	✓			
Sweeping and dry mopping are frequently done to reduce the amount of dirt, fluids, and other residues that accumulate in work areas	✓			
Sweeping and dry mopping are done instead of cleaning up with water whenever possible, especially outside	✓			
Updated spill prevention plan for facility	✓			online
Updated spill cleanup plan for facility	✓			
Spills cleaned up promptly	✓			
Absorbents like sand and special spill cleanup powders on hand to help clean up spills	✓			Fire Station
Rags kept handy for cleanup	✓			

City of Rosenberg

Storm Water Pollution Prevention Plan (SWPPP)

Facility Checklist

Facility Name: Rosenberg Fire Station 1
Address: 1021 Fourth St

Phone #: (832) 595-3600 Fax #: (832) 595-3601

Date: 1/31/11 Inspector's Name and Title: Darrell Hinly Asst. Chief

Building and Grounds Maintenance

Are the following conditions met?	Yes	No	N/A	Comments
Clean up without water using sweeping or wiping	✓			
Spills prevented and cleaned up	✓			
Debris and litter cleaned up and not washed into storm drains	✓			
Detergents not used in steam or pressure washing	✓			
Catch basins and storm drains cleaned regularly	✓			
Soil erosion controlled	✓			
Lawn clippings, trimmings from trees and other landscaping disposed of properly	✓			
Correct types and amounts of fertilizer, herbicides, and/or pesticides for landscaping used			✓	
Overwatering avoided			✓	
Fertilizers, pesticides, or herbicides not applied during rainy weather			✓	

Waste Disposal and Reduction

Trash dumpster lids kept closed	✓			
Dropped trash picked up	✓			
Dumpster areas swept	✓			
Wastes cleaned up with broom instead of water	✓			
Liquid wastes kept out of dumpsters	✓			

Form Updated 12/11/08
Call 832-595-3960 for more information, or go to the City website at www.ci.rosenberg.tx.us
Please record changes to this document in the Updates to Storm Water Pollution Prevention Records.

City of Rosenberg

Are the following conditions met?	Yes	No	N/A	Comments
Hazardous or harmful wastes kept out of dumpsters or trash containers	✓			
Leaking dumpsters fixed			✓	Contract
No wastes are put in storm drains or sewers	✓			
Paper, cans, glass and plastics are recycled	✓			
Smaller volumes of materials and supplies are ordered to avoid waste	✓			
Washable drinking cups are used in the office	✓			
City recycling and waste reduction guidelines are followed	✓			

Equipment Maintenance

Prevention of spills	✓			
Fueling areas covered			✓	
Sweep or use other dry methods rather than hosing down the fuel area for cleaning			✓	
Signs posted warning against "topping off"			✓	
Read and follow the guidelines that apply			✓	
Work area kept clean	✓			
Inspection for leaks, malfunctions, and staining on or around vehicles and equipment	✓			
Oil filters drained before disposal or recycling			✓	
All fluids contained or drained from wrecked vehicles or equipment that has to be replaced			✓	
Cracked batteries stored in a non-leaking secondary container			✓	
Full drip pans or other open containers of used liquids not left sitting around	✓			
Organized inventory of materials maintained	✓			

Form Updated 12/11/08

Call 832-595-3960 for more information, or go to the City website at www.ci.rosenberg.tx.us

Please record changes to this document in the Updates to Storm Water Pollution Prevention Records.

City of Rosenberg

Are the following conditions met?	Yes	No	N/A	Comments
Recycling of waste materials (e.g. used oil, spent solvents, batteries) labeled and tracked			✓	
Drip pans used for vehicles and equipment waiting for maintenance	✓			
Parked under cover to prevent exposure to rainfall	✓			
Parts or equipment not washed outside			✓	
Equipment or vehicles washed in designated areas where wash water is released into sanitary sewer system		✓		washed w/ Biodegradable soap
Barriers or absorbent pads used to prevent dirty, polluted wash water from entering a storm drain inlet		✓		
Wash water contained and recycled. Wash water does not flow into gutter or storm drain.		✓		
Spills, leaks, wastes or wash water from vehicles or equipment not allowed to enter the storm drain	✓	✓		

Materials Handling and Storage

Handling instructions read and followed for all stored materials	✓			
Storage containers are spill-proof; inspected for leaks and routine maintenance performed	✓			
Storage tanks and piping systems inspected for leaks or failures and routine maintenance performed			✓	
Safeguards (such as berms or secondary containment basins) used against accidental releases of liquids from storage area			✓	

S1-2

City of Rosenberg

Are the following conditions met?	Yes	No	N/A	Comments
Materials stored in appropriate containers	✓			
Stored materials protected from rainwater	✓			
Materials stored indoors and on pallets, if possible	✓			
Materials stored outdoors covered with sheets of plastic or other types of cover			✓	
Hazardous materials stored according to federal, state, and local requirements	✓			

Spill Prevention

Precautions taken to prevent spills	✓			
Sweeping and dry mopping are frequently done to reduce the amount of dirt, fluids, and other residues that accumulate in work areas	✓			
Sweeping and dry mopping are done instead of cleaning up with water whenever possible, especially outside	✓			
Updated spill prevention plan for facility	✓			online
Updated spill cleanup plan for facility	✓			
Spills cleaned up promptly	✓			
Absorbents like sand and special spill cleanup powders on hand to help clean up spills	✓			
Rags kept handy for cleanup	✓			

City of Rosenberg

STORM WATER POLLUTION PREVENTION PLAN AUDIT
SIGNIFICANT MATERIAL INVENTORY

Facility Name: Rosenberg Police Department

Address: 2120 Fourth Street
Rosenberg TX 77471

Date: 2/15/2011 Inspector's Name and Title: Colin Davidson, Lieutenant

Instructions: Identify all chemical substances present in the work place. Walk through the facility and review the purchase orders for the previous year. List all chemical substances used in the work place and then obtain the material safety data sheet (MSDS) for each. Make sure all containers are labeled to show the name and type of substance, stock number, expiration date, health hazards, suggestions for handling, and first aid information. This information is found on the MSDS. Unlabeled chemicals and chemicals with deteriorated labels are often disposed of improperly or unnecessarily. Clearly mark on the inventory those hazardous materials that require specific handling, storage, use and disposal considerations.

Material: Diesel Fuel

Typical Quantity: 250 Gallons

Frequency of Use: Hourly / Daily / Once a Week / Multiple Times per Week / Monthly
Other _____

Material Management Practices
Handling Location (as indicated on the site map) Above Ground Storage Tank - Generator

Storage Location (as indicated on the site map) Extension of Building West Parking Area - Enclosed By 6' Foot Chain link fence.

Method of Storage: Above Ground Storage

Method of Disposal: Dumpster / Sanitary Sewer / Recycling / Other _____

Material: _____

Typical Quantity: _____

Frequency of Use: Hourly / Daily / Once a Week / Multiple Times per Week / Monthly
Other _____

Material Management Practices
Handling Location (as indicated on the site map) _____

Form Updated 12/11/08
Call 832-595-3960 for more information, or go to the City website at www.ci.rosenberg.tx.us
Please record changes to this document in the Updates to Storm Water Pollution Prevention Records.

COPY

Storage Location (as indicated on the site map) _____

_____

_____

Method of Storage: _____

Method of Disposal: Dumpster / Sanitary Sewer / Recycling / Other _____

Material: _____

Typical Quantity: _____

Frequency of Use: Hourly / Daily / Once a Week / Multiple Times per Week / Monthly
Other _____

Material Management Practices

Handling Location (as indicated on the site map) _____

_____

_____

Storage Location (as indicated on the site map) _____

_____

_____

Method of Storage: _____

Method of Disposal: Dumpster / Sanitary Sewer / Recycling / Other _____

Material: _____

Typical Quantity: _____

Frequency of Use: Hourly / Daily / Once a Week / Multiple Times per Week / Monthly
Other _____

Material Management Practices

Handling Location (as indicated on the site map) _____

_____

_____

Storage Location (as indicated on the site map) _____

_____

_____

Method of Storage: _____

Method of Disposal: Dumpster / Sanitary Sewer / Recycling / Other _____

City of Rosenberg

STORM WATER POLLUTION PREVENTION PLAN AUDIT
SIGNIFICANT MATERIAL INVENTORY

Facility Name: Rosenberg Police Dept. ID offices / Lab

Address: 2120 Fountain Street

Rosenberg TX 77471

Date: 04/15/2011 Inspector's Name and Title: Colin Davidson, Lieutenant

Instructions: Identify all chemical substances present in the work place. Walk through the facility and review the purchase orders for the previous year. List all chemical substances used in the work place and then obtain the material safety data sheet (MSDS) for each. Make sure all containers are labeled to show the name and type of substance, stock number, expiration date, health hazards, suggestions for handling, and first aid information. This information is found on the MSDS. Unlabeled chemicals and chemicals with deteriorated labels are often disposed of improperly or unnecessarily. Clearly mark on the inventory those hazardous materials that require specific handling, storage, use and disposal considerations.

Material: - See Attached -

Typical Quantity: _____

Frequency of Use: Hourly / Daily / Once a Week / Multiple Times per Week / Monthly
Other _____

Material Management Practices

Handling Location (as indicated on the site map) _____

Storage Location (as indicated on the site map) _____

Method of Storage: _____

Method of Disposal: Dumpster / Sanitary Sewer / Recycling / Other _____

Material: _____

Typical Quantity: _____

Frequency of Use: Hourly / Daily / Once a Week / Multiple Times per Week / Monthly
Other _____

Material Management Practices

Handling Location (as indicated on the site map) _____

City of Rosenberg

Storage Location (as indicated on the site map) _____

_____

_____

Method of Storage: _____

Method of Disposal: Dumpster / Sanitary Sewer / Recycling / Other _____

Material: _____

Typical Quantity: _____

Frequency of Use: Hourly / Daily / Once a Week / Multiple Times per Week / Monthly
Other _____

Material Management Practices

Handling Location (as indicated on the site map) _____

_____

_____

Storage Location (as indicated on the site map) _____

_____

_____

Method of Storage: _____

Method of Disposal: Dumpster / Sanitary Sewer / Recycling / Other _____

Material: _____

Typical Quantity: _____

Frequency of Use: Hourly / Daily / Once a Week / Multiple Times per Week / Monthly
Other _____

Material Management Practices

Handling Location (as indicated on the site map) _____

_____

_____

Storage Location (as indicated on the site map) _____

_____

_____

Method of Storage: _____

Method of Disposal: Dumpster / Sanitary Sewer / Recycling / Other _____

February 15, 2011

Rosenberg Police Department
2120 Fourth Street
Rosenberg, Texas 77471

RE: Storm Water Pollution Prevention Plan Audit Materials List

Identification Division Offices (Interior)

Ninhydrin
Amido Black
Blue Star forensic – Latent Bloodstain Reagent

Film processing and Developing

CH1 processing – Color

Developer
Stabilizer – Replenisher
Fix- Replenisher

Black and White

DIC-50 Powder
Rapid fixer
Dektol
Hydro Eliminator

City of Rosenberg

STORM WATER POLLUTION PREVENTION PLAN AUDIT
SIGNIFICANT MATERIAL INVENTORY

Facility Name: Rosenberg Police – Jail facility

Address: 2120 Fourth Street

Rosenberg, TX 77471

Date: 02/15/2011 Inspector's Name and Title: Colin Davidson, Lieutenant

Instructions: Identify all chemical substances present in the work place. Walk through the facility and review the purchase orders for the previous year. List all chemical substances used in the work place and then obtain the material safety data sheet (MSDS) for each. Make sure all containers are labeled to show the name and type of substance, stock number, expiration date, health hazards, suggestions for handling, and first aid information. This information is found on the MSDS. Unlabeled chemicals and chemicals with deteriorated labels are often disposed of improperly or unnecessarily. Clearly mark on the inventory those hazardous materials that require specific handling, storage, use and disposal considerations.

Material: – See Attached –

Typical Quantity: _____

Frequency of Use: Hourly / Daily / Once a Week / Multiple Times per Week / Monthly
Other _____

Material Management Practices

Handling Location (as indicated on the site map) _____

Storage Location (as indicated on the site map) _____

Method of Storage: _____

Method of Disposal: Dumpster / Sanitary Sewer / Recycling / Other _____

Material: _____

Typical Quantity: _____

Frequency of Use: Hourly / Daily / Once a Week / Multiple Times per Week / Monthly
Other _____

Material Management Practices

Handling Location (as indicated on the site map) _____

Storage Location (as indicated on the site map) _____

_____

_____

Method of Storage: _____

Method of Disposal: Dumpster / Sanitary Sewer / Recycling / Other _____

Material: _____

Typical Quantity: _____

Frequency of Use: Hourly / Daily / Once a Week / Multiple Times per Week / Monthly
Other _____

Material Management Practices

Handling Location (as indicated on the site map) _____

_____

_____

Storage Location (as indicated on the site map) _____

_____

_____

Method of Storage: _____

Method of Disposal: Dumpster / Sanitary Sewer / Recycling / Other _____

Material: _____

Typical Quantity: _____

Frequency of Use: Hourly / Daily / Once a Week / Multiple Times per Week / Monthly
Other _____

Material Management Practices

Handling Location (as indicated on the site map) _____

_____

_____

Storage Location (as indicated on the site map) _____

_____

_____

Method of Storage: _____

Method of Disposal: Dumpster / Sanitary Sewer / Recycling / Other _____

February 15, 2011

Rosenberg Police Department
2120 Fourth Street
Rosenberg, Texas 77471

RE: Storm Water Pollution Prevention Plan Audit Materials List

Jail Facility (Interior)

Windex
Cloralex
Simple Green Cleaner
Comet
Tilex
Big Pine Disinfectant – Cleaner
Heavy Duty Degreaser
Seal All Floor sealer
Hand Sanitizer

City of Rosenberg

STORM WATER POLLUTION PREVENTION PLAN AUDIT
SIGNIFICANT MATERIAL INVENTORY

Facility Name: Rosenberg Police Dept

Address: 2120 Fourth Street
Rosenberg, Tx 77471

Date: 7/15/2011 Inspector's Name and Title: Colin Davidson, Lieutenant

Instructions: Identify all chemical substances present in the work place. Walk through the facility and review the purchase orders for the previous year. List all chemical substances used in the work place and then obtain the material safety data sheet (MSDS) for each. Make sure all containers are labeled to show the name and type of substance, stock number, expiration date, health hazards, suggestions for handling, and first aid information. This information is found on the MSDS. Unlabeled chemicals and chemicals with deteriorated labels are often disposed of improperly or unnecessarily. Clearly mark on the inventory those hazardous materials that require specific handling, storage, use and disposal considerations.

Material: Custodial Closet - See Attached

Typical Quantity: _____

Frequency of Use: Hourly / Daily / Once a Week / Multiple Times per Week / Monthly
Other _____

Material Management Practices

Handling Location (as indicated on the site map) _____

Storage Location (as indicated on the site map) _____

Method of Storage: _____

Method of Disposal: Dumpster / Sanitary Sewer / Recycling / Other _____

Material: _____

Typical Quantity: _____

Frequency of Use: Hourly / Daily / Once a Week / Multiple Times per Week / Monthly
Other _____

Material Management Practices

Handling Location (as indicated on the site map) _____

Storage Location (as indicated on the site map) _____

_____

_____

Method of Storage: _____

Method of Disposal: Dumpster / Sanitary Sewer / Recycling / Other _____

Material: _____

Typical Quantity: _____

Frequency of Use: Hourly / Daily / Once a Week / Multiple Times per Week / Monthly
Other _____

Material Management Practices

Handling Location (as indicated on the site map) _____

_____

_____

Storage Location (as indicated on the site map) _____

_____

_____

Method of Storage: _____

Method of Disposal: Dumpster / Sanitary Sewer / Recycling / Other _____

Material: _____

Typical Quantity: _____

Frequency of Use: Hourly / Daily / Once a Week / Multiple Times per Week / Monthly
Other _____

Material Management Practices

Handling Location (as indicated on the site map) _____

_____

_____

Storage Location (as indicated on the site map) _____

_____

_____

Method of Storage: _____

Method of Disposal: Dumpster / Sanitary Sewer / Recycling / Other _____

February 15, 2011

Rosenberg Police Department
2120 Fourth Street
Rosenberg, Texas 77471

RE: Storm Water Pollution Prevention Plan Audit Materials List

Custodial Closet (Interior)

Pine Sol
Windex
409-All purpose
Pabelosse
Clorox
Drain –o
Stainless Steel Cleaner

City of Rosenberg

Storm Water Pollution Prevention Plan (SWPPP)

Facility Checklist

Facility Name: Rosenberg Police Department
Address: 2120 Fourth Street
Rosenberg, TX 77471
Phone #: (832) 595-3726 Fax #: ( )

Date: 02/15/2011 Inspector's Name and Title: Colin Davidson, Lieutenant

Building and Grounds Maintenance

Are the following conditions met?	Yes	No	N/A	Comments
Clean up without water using sweeping or wiping	✓			
Spills prevented and cleaned up	✓			
Debris and litter cleaned up and not washed into storm drains	✓			
Detergents not used in steam or pressure washing	✓			
Catch basins and storm drains cleaned regularly	✓			
Soil erosion controlled	✓			
Lawn clippings, trimmings from trees and other landscaping disposed of properly	✓			
Correct types and amounts of fertilizer, herbicides, and/or pesticides for landscaping used	✓			
Overwatering avoided	✓			
Fertilizers, pesticides, or herbicides not applied during rainy weather	✓			

Waste Disposal and Reduction

Trash dumpster lids kept closed	✓			
Dropped trash picked up	✓			
Dumpster areas swept	✓			
Wastes cleaned up with broom instead of water	✓			
Liquid wastes kept out of dumpsters	✓			

Form Updated 12/11/08
Call 832-595-3960 for more information, or go to the City website at www.ci.rosenberg.tx.us
Please record changes to this document in the Updates to Storm Water Pollution Prevention Records.

City of Rosenberg

Are the following conditions met?	Yes	No	N/A	Comments
Hazardous or harmful wastes kept out of dumpsters or trash containers	✓			
Leaking dumpsters fixed	✓			
No wastes are put in storm drains or sewers	✓			
Paper, cans, glass and plastics are recycled	✓			
Smaller volumes of materials and supplies are ordered to avoid waste	✓			
Washable drinking cups are used in the office	✓			
City recycling and waste reduction guidelines are followed	✓			

Equipment Maintenance

Prevention of spills	✓			
Fueling areas covered			✓	
Sweep or use other dry methods rather than hosing down the fuel area for cleaning			✓	
Signs posted warning against "topping off"			✓	
Read and follow the guidelines that apply			✓	
Work area kept clean			✓	
Inspection for leaks, malfunctions, and staining on or around vehicles and equipment	✓			
Oil filters drained before disposal or recycling			✓	
All fluids contained or drained from wrecked vehicles or equipment that has to be replaced			✓	
Cracked batteries stored in a non-leaking secondary container			✓	
Full drip pans or other open containers of used liquids not left sitting around			✓	
Organized inventory of materials maintained			✓	

Form Updated 12/11/08

Call 832-595-3960 for more information, or go to the City website at www.ci.rosenberg.tx.us.

Please record changes to this document in the Updates to Storm Water Pollution Prevention Records.

City of Rosenberg

Are the following conditions met?	Yes	No	N/A	Comments
Recycling of waste materials (e.g. used oil, spent solvents, batteries) labeled and tracked			✓	
Drip pans used for vehicles and equipment waiting for maintenance			✓	
Parked under cover to prevent exposure to rainfall			✓	
Parts or equipment not washed outside			✓	
Equipment or vehicles washed in designated areas where wash water is released into sanitary sewer system	✓			
Barriers or absorbent pads used to prevent dirty, polluted wash water from entering a storm drain inlet			✓	
Wash water contained and recycled. Wash water does not flow into gutter or storm drain.			✓	
Spills, leaks, wastes or wash water from vehicles or equipment not allowed to enter the storm drain			✓	

Materials Handling and Storage

Handling instructions read and followed for all stored materials	✓			
Storage containers are spill-proof; inspected for leaks and routine maintenance performed	✓			
Storage tanks and piping systems inspected for leaks or failures and routine maintenance performed	✓			
Safeguards (such as berms or secondary containment basins) used against accidental releases of liquids from storage area			✓	

Form Updated 12/11/08

Call 832-595-3960 for more information, or go to the City website at www.ci.rosenberg.tx.us

Please record changes to this document in the Updates to Storm Water Pollution Prevention Records.

City of Rosenberg

Are the following conditions met?	Yes	No	N/A	Comments
Materials stored in appropriate containers	✓			
Stored materials protected from rainwater	✓			
Materials stored indoors and on pallets, if possible			✓	
Materials stored outdoors covered with sheets of plastic or other types of cover			✓	
Hazardous materials stored according to federal, state, and local requirements	✓			

Spill Prevention

Precautions taken to prevent spills			✓	
Sweeping and dry mopping are frequently done to reduce the amount of dirt, fluids, and other residues that accumulate in work areas			✓	
Sweeping and dry mopping are done instead of cleaning up with water whenever possible, especially outside			✓	
Updated spill prevention plan for facility			✓	
Updated spill cleanup plan for facility			✓	
Spills cleaned up promptly			✓	
Absorbents like sand and special spill cleanup powders on hand to help clean up spills			✓	
Rags kept handy for cleanup			✓	

City of Rosenberg

Storm Water Pollution Prevention Plan (SWPPP)

Facility Checklist

Facility Name: Parks Department
Address: 3720 Airport
Rosenberg, Tx 77471
Phone #: (832) 595-3960 Fax #: (832) 595-3961

Date: 2/17/2011 Inspector's Name and Title: Joseph Paul Mendoza
Asst. Parks supervisor

Building and Grounds Maintenance

Are the following conditions met?	Yes	No	N/A	Comments
Clean up without water using sweeping or wiping	✓			
Spills prevented and cleaned up	✓			
Debris and litter cleaned up and not washed into storm drains	✓			
Detergents not used in steam or pressure washing	✓			
Catch basins and storm drains cleaned regularly			✓	
Soil erosion controlled	✓			
Lawn clippings, trimmings from trees and other landscaping disposed of properly	✓			
Correct types and amounts of fertilizer, herbicides, and/or pesticides for landscaping used	✓			
Overwatering avoided	✓			
Fertilizers, pesticides, or herbicides not applied during rainy weather	✓			

Waste Disposal and Reduction

Trash dumpster lids kept closed	✓			
Dropped trash picked up	✓			
Dumpster areas swept	✓			
Wastes cleaned up with broom instead of water	✓			
Liquid wastes kept out of dumpsters	✓			

City of Rosenberg

Are the following conditions met?	Yes	No	N/A	Comments
Hazardous or harmful wastes kept out of dumpsters or trash containers	✓			
Leaking dumpsters fixed	✓			
No wastes are put in storm drains or sewers	✓			
Paper, cans, glass and plastics are recycled	✓			
Smaller volumes of materials and supplies are ordered to avoid waste	✓			
Washable drinking cups are used in the office	✓			
City recycling and waste reduction guidelines are followed	✓			

Equipment Maintenance

Prevention of spills	✓			
Fueling areas covered			✓	No fuel station at this location
Sweep or use other dry methods rather than hosing down the fuel area for cleaning			✓	
Signs posted warning against "topping off"			✓	
Read and follow the guidelines that apply	✓			
Work area kept clean	✓			
Inspection for leaks, malfunctions, and staining on or around vehicles and equipment	✓			
Oil filters drained before disposal or recycling			✓	
All fluids contained or drained from wrecked vehicles or equipment that has to be replaced			✓	
Cracked batteries stored in a non-leaking secondary container			✓	
Full drip pans or other open containers of used liquids not left sitting around			✓	
Organized inventory of materials maintained	✓			

City of Rosenberg

Are the following conditions met?	Yes	No	N/A	Comments
Recycling of waste materials (e.g. used oil, spent solvents, batteries) labeled and tracked			✓	
Drip pans used for vehicles and equipment waiting for maintenance			✓	
Parked under cover to prevent exposure to rainfall	✓			
Parts or equipment not washed outside	✓			
Equipment or vehicles washed in designated areas where wash water is released into sanitary sewer system	✓			
Barriers or absorbent pads used to prevent dirty, polluted wash water from entering a storm drain inlet			✓	No wash station at this location
Wash water contained and recycled. Wash water does not flow into gutter or storm drain.			✓	
Spills, leaks, wastes or wash water from vehicles or equipment not allowed to enter the storm drain	✓			

Materials Handling and Storage

Handling instructions read and followed for all stored materials	✓			
Storage containers are spill-proof; inspected for leaks and routine maintenance performed	✓			
Storage tanks and piping systems inspected for leaks or failures and routine maintenance performed			✓	
Safeguards (such as berms or secondary containment basins) used against accidental releases of liquids from storage area			✓	

City of Rosenberg

Are the following conditions met?	Yes	No	N/A	Comments
Materials stored in appropriate containers	✓			
Stored materials protected from rainwater	✓			
Materials stored indoors and on pallets, if possible	✓			
Materials stored outdoors covered with sheets of plastic or other types of cover	✓			
Hazardous materials stored according to federal, state, and local requirements	✓			

Spill Prevention

Precautions taken to prevent spills	✓			
Sweeping and dry mopping are frequently done to reduce the amount of dirt, fluids, and other residues that accumulate in work areas	✓			
Sweeping and dry mopping are done instead of cleaning up with water whenever possible, especially outside	✓			
Updated spill prevention plan for facility	✓			
Updated spill cleanup plan for facility	✓			
Spills cleaned up promptly	✓			
Absorbents like sand and special spill cleanup powders on hand to help clean up spills	✓			
Rags kept handy for cleanup	✓			

City of Rosenberg

STORM WATER POLLUTION PREVENTION PLAN AUDIT
SIGNIFICANT MATERIAL INVENTORY

Facility Name: Parks Department

Address: 3720 Airport
Rosenberg, Tx 77471

Date: 2/17/2011 Inspector's Name and Title: Joseph Paul Mendoza
Asst. Parks supervisor

Instructions: Identify all chemical substances present in the work place. Walk through the facility and review the purchase orders for the previous year. List all chemical substances used in the work place and then obtain the material safety data sheet (MSDS) for each. Make sure all containers are labeled to show the name and type of substance, stock number, expiration date, health hazards, suggestions for handling, and first aid information. This information is found on the MSDS. Unlabeled chemicals and chemicals with deteriorated labels are often disposed of improperly or unnecessarily. Clearly mark on the inventory those hazardous materials that require specific handling, storage, use and disposal considerations.

Material: Roundup Pro concentrate

Typical Quantity: 30 gallons

Frequency of Use: Hourly / Daily / Once a Week / Multiple Times per Week / (Monthly)
Other _____

Material Management Practices

Handling Location (as indicated on the site map) _____
Bay area of shop

Storage Location (as indicated on the site map) _____
Rear storage room F

Method of Storage: Manufacturers 2.5 gal containers

Method of Disposal: (Dumpster) / Sanitary Sewer / Recycling / Other empty triple washed containers

Material: Total Solutions Eliminator NW weedkiller

Typical Quantity: 10 gallons

Frequency of Use: Hourly / Daily / Once a Week / Multiple Times per Week / (Monthly)
Other _____

Material Management Practices

Handling Location (as indicated on the site map) _____
Bay area of shop

Form Updated 12/11/08
Call 832-595-3960 for more information, or go to the City website at www.ci.rosenberg.tx.us
Please record changes to this document in the Updates to Storm Water Pollution Prevention Records.

City of Rosenberg

Storage Location (as indicated on the site map) Storage room F

Method of Storage: Manufacturers 1 gal containers

Method of Disposal: Dumpster / Sanitary Sewer / Recycling / Other empty triple washed containers

Material: Husky N/D Germicidal Cleaner

Typical Quantity: 45 gallons

Frequency of Use: Hourly / Daily / Once a Week / Multiple Times per Week / Monthly
Other As needed

Material Management Practices

Handling Location (as indicated on the site map) Storage room E

Storage Location (as indicated on the site map) Storage room E

Method of Storage: Manufacturers 55 gallon drum

Method of Disposal: Dumpster / Sanitary Sewer / Recycling / Other empty washed container

Material: Latex paint

Typical Quantity: 100 gallons

Frequency of Use: Hourly / Daily / Once a Week / Multiple Times per Week / Monthly
Other

Material Management Practices

Handling Location (as indicated on the site map) Bay area of shop

Storage Location (as indicated on the site map) Bay area of shop

Method of Storage: Approved metal storage cabinet

Method of Disposal: Dumpster / Sanitary Sewer / Recycling / Other empty dried cans

Storage Location (as indicated on the site map) _____

Method of Storage: _____

Method of Disposal: Dumpster / Sanitary Sewer / Recycling / Other _____

Material: Oil base paint

Typical Quantity: 30 gallons

Frequency of Use: Hourly / Daily / Once a Week / Multiple Times per Week / (Monthly)
Other _____

Material Management Practices

Handling Location (as indicated on the site map) _____

Bay area of shop

Storage Location (as indicated on the site map) _____

Bay area of shop

Method of Storage: Approved metal storage cabinet

Method of Disposal: Dumpster / Sanitary Sewer / Recycling / Other _____

Material: _____

Typical Quantity: _____

Frequency of Use: Hourly / Daily / Once a Week / Multiple Times per Week / Monthly
Other _____

Material Management Practices

Handling Location (as indicated on the site map) _____

Storage Location (as indicated on the site map) _____

Method of Storage: _____

Method of Disposal: Dumpster / Sanitary Sewer / Recycling / Other _____

City of Rosenberg

Storm Water Pollution Prevention Plan (SWPPP)

Facility Checklist

Facility Name: City Hall
Address: 2110 Fourth st.

Phone #: (832) 595-3300 Fax #: ( )

Date: 2/21/11 Inspector's Name and Title: Joseph Paul Mendoza Asst. Parks Sup.

Building and Grounds Maintenance

Are the following conditions met?	Yes	No	N/A	Comments
Clean up without water using sweeping or wiping	✓			
Spills prevented and cleaned up	✓			
Debris and litter cleaned up and not washed into storm drains	✓			
Detergents not used in steam or pressure washing	✓			
Catch basins and storm drains cleaned regularly	✓			
Soil erosion controlled	✓			
Lawn clippings, trimmings from trees and other landscaping disposed of properly	✓			
Correct types and amounts of fertilizer, herbicides, and/or pesticides for landscaping used	✓			
Overwatering avoided	✓			
Fertilizers, pesticides, or herbicides not applied during rainy weather	✓			

Waste Disposal and Reduction

Trash dumpster lids kept closed	✓			
Dropped trash picked up	✓			
Dumpster areas swept	✓			
Wastes cleaned up with broom instead of water	✓			
Liquid wastes kept out of dumpsters	✓			

City of Rosenberg

Are the following conditions met?	Yes	No	N/A	Comments
Hazardous or harmful wastes kept out of dumpsters or trash containers	✓			
Leaking dumpsters fixed	✓			
No wastes are put in storm drains or sewers	✓			
Paper, cans, glass and plastics are recycled	✓			
Smaller volumes of materials and supplies are ordered to avoid waste	✓			
Washable drinking cups are used in the office	✓			
City recycling and waste reduction guidelines are followed	✓			

Equipment Maintenance

Prevention of spills			✓	
Fueling areas covered			✓	
Sweep or use other dry methods rather than hosing down the fuel area for cleaning			✓	
Signs posted warning against "topping off"			✓	
Read and follow the guidelines that apply			✓	
Work area kept clean			✓	
Inspection for leaks, malfunctions, and staining on or around vehicles and equipment			✓	
Oil filters drained before disposal or recycling			✓	
All fluids contained or drained from wrecked vehicles or equipment that has to be replaced			✓	
Cracked batteries stored in a non-leaking secondary container			✓	
Full drip pans or other open containers of used liquids not left sitting around			✓	
Organized inventory of materials maintained			✓	

City of Rosenberg

Are the following conditions met?	Yes	No	N/A	Comments
Recycling of waste materials (e.g. used oil, spent solvents, batteries) labeled and tracked			✓	
Drip pans used for vehicles and equipment waiting for maintenance			✓	
Parked under cover to prevent exposure to rainfall			✓	
Parts or equipment not washed outside			✓	
Equipment or vehicles washed in designated areas where wash water is released into sanitary sewer system			✓	
Barriers or absorbent pads used to prevent dirty, polluted wash water from entering a storm drain inlet			✓	
Wash water contained and recycled. Wash water does not flow into gutter or storm drain.			✓	
Spills, leaks, wastes or wash water from vehicles or equipment not allowed to enter the storm drain			✓	

Materials Handling and Storage

Handling instructions read and followed for all stored materials	✓			
Storage containers are spill-proof; inspected for leaks and routine maintenance performed			✓	
Storage tanks and piping systems inspected for leaks or failures and routine maintenance performed			✓	
Safeguards (such as berms or secondary containment basins) used against accidental releases of liquids from storage area			✓	

City of Rosenberg

Are the following conditions met?	Yes	No	N/A	Comments
Materials stored in appropriate containers	✓			
Stored materials protected from rainwater	✓			
Materials stored indoors and on pallets, if possible	✓			
Materials stored outdoors covered with sheets of plastic or other types of cover			✓	
Hazardous materials stored according to federal, state, and local requirements			✓	

Spill Prevention

Precautions taken to prevent spills	✓			
Sweeping and dry mopping are frequently done to reduce the amount of dirt, fluids, and other residues that accumulate in work areas	✓			
Sweeping and dry mopping are done instead of cleaning up with water whenever possible, especially outside	✓			
Updated spill prevention plan for facility	✓			
Updated spill cleanup plan for facility	✓			
Spills cleaned up promptly	✓			
Absorbents like sand and special spill cleanup powders on hand to help clean up spills			✓	
Rags kept handy for cleanup	✓			

City of Rosenberg

Storm Water Pollution Prevention Plan (SWPPP)

Facility Checklist

(To be complete quarterly)

Facility Name: NWTP#1A

Address: 2700 Ave A

Phone #: (___)_____ Fax #: (___)_____

Date: 4/1/11 Inspector's Name and Title: Steve Kovacka – Utilities Supervisor

Building and Grounds Maintenance

Are the following conditions met?	Yes	No	N/A	Comments
Clean up without water using sweeping or wiping	X			
Spills prevented and cleaned up	X			
Debris and litter cleaned up and not washed into storm drains	X			
Detergents not used in steam or pressure washing	X			
Catch basins and storm drains cleaned regularly	X			
Soil erosion controlled	X			
Lawn clippings, trimmings from trees and other landscaping disposed of properly			X	
Correct types and amounts of fertilizer, herbicides, and/or pesticides for landscaping used			X	
Overwatering avoided			X	
Fertilizers, pesticides, or herbicides not applied during rainy weather			X	

Waste Disposal and Reduction

Trash dumpster lids kept closed	X			
Dropped trash picked up	X			
Dumpster areas swept			X	
Wastes cleaned up with broom instead of water	X			
Liquid wastes kept out of dumpsters	X			

Call 832-595-3960 for more information, or go to the City website at www.ci.rosenberg.tx.us

Please record changes to this document in the Updates to Storm Water Pollution Prevention Records.

City of Rosenberg

Are the following conditions met?	Yes	No	N/A	Comments
Hazardous or harmful wastes kept out of dumpsters or trash containers	X			
Leaking dumpsters fixed		X		No Drain plugs- corrected
No wastes are put in storm drains or sewers	X			
Paper, cans, and plastics are recycled	X			
Smaller volumes of materials and supplies are ordered to avoid waste	X			
City recycling and waste reduction guidelines are followed	X			

Equipment Maintenance

Prevention of spills	X			
Fueling areas covered			X	
Sweep or use other dry methods rather than hosing down the fuel area for cleaning			X	
Signs posted warning against "topping off"			X	
Read and follow the guidelines that apply	X			
Work area kept clean	X			
Inspection for leaks, malfunctions, and staining on or around vehicles and equipment			X	
Oil filters drained before disposal or recycling			X	
All fluids contained or drained from wrecked vehicles or equipment that has to be replaced			X	
Cracked batteries stored in a non-leaking secondary container			X	
Full drip pans or other open containers of used liquids not left sitting around			X	
Organized inventory of materials maintained	X			

Call 832-595-3960 for more information, or go to the City website at www.ci.rosenberg.tx.us

Please record changes to this document in the Updates to Storm Water Pollution Prevention Records.

Are the following conditions met?	Yes	No	N/A	Comments
Recycling of waste materials (e.g. used oil, spent solvents, batteries) labeled and tracked			X	
Drip pans used for vehicles and equipment waiting for maintenance			X	
Parked under cover to prevent exposure to rainfall			X	
Parts or equipment not washed outside	X			
Equipment or vehicles washed in designated areas where wash water is released into sanitary sewer system	X			
Barriers or absorbent pads used to prevent dirty, polluted wash water from entering a storm drain inlet	X			
Wash water contained and recycled. Wash water does not flow into gutter or storm drain.	X			
Spills, leaks, wastes or wash water from vehicles or equipment not allowed to enter the storm drain	X			

Materials Handling and Storage

Handling instructions read and followed for all stored materials	X			
Storage containers are spill-proof; inspected for leaks and routine maintenance performed	X			
Storage tanks and piping systems inspected for leaks or failures and routine maintenance performed			X	
Safeguards (such as berms or secondary containment basins) used against accidental releases of liquids from storage area		X		No Secondary Containment on Oil Drums - IN Shop

Are the following conditions met?	Yes	No	N/A	Comments
Materials stored in appropriate containers	X			
Stored materials protected from rainwater	X			
Materials stored indoors and on pallets, if possible	X			
Materials stored outdoors covered with sheets of plastic or other types of cover			X	
Hazardous materials stored according to federal, state, and local requirements	X			

Spill Prevention

Precautions taken to prevent spills	X			
Sweeping and dry mopping are frequently done to reduce the amount of dirt, fluids, and other residues that accumulate in work areas	X			
Sweeping and dry mopping are done instead of cleaning up with water whenever possible, especially outside	X			
Updated spill prevention plan for facility	X			
Updated spill cleanup plan for facility	X			
Spills cleaned up promptly	X			
Absorbents like sand and special spill cleanup powders on hand to help clean up spills	X			
Rags kept handy for cleanup	X			

City of Rosenberg

Storm Water Pollution Prevention Plan (SWPPP)

Facility Checklist

(To be complete quarterly)

Facility Name: Storage Building
Address: Across From 2700 Ave A

Phone #: ( ) Fax #: ( )

Date: 4/11/14 Inspector's Name and Title: Steve Vaureda - Utilities Supervisor

Building and Grounds Maintenance

Are the following conditions met?	Yes	No	N/A	Comments
Clean up without water using sweeping or wiping	X			
Spills prevented and cleaned up	X			
Debris and litter cleaned up and not washed into storm drains	X			
Detergents not used in steam or pressure washing			X	
Catch basins and storm drains cleaned regularly			X	
Soil erosion controlled	X			
Lawn clippings, trimmings from trees and other landscaping disposed of properly			X	
Correct types and amounts of fertilizer, herbicides, and/or pesticides for landscaping used			X	
Overwatering avoided			X	
Fertilizers, pesticides, or herbicides not applied during rainy weather			X	

Waste Disposal and Reduction

Trash dumpster lids kept closed			X	
Dropped trash picked up	X			
Dumpster areas swept			X	
Wastes cleaned up with broom instead of water	X			
Liquid wastes kept out of dumpsters			X	

Call 832-595-3960 for more information, or go to the City website at www.ci.rosenberg.tx.us

Please record changes to this document in the Updates to Storm Water Pollution Prevention Records.

City of Rosenberg

Are the following conditions met?	Yes	No	N/A	Comments
Hazardous or harmful wastes kept out of dumpsters or trash containers	X			
Leaking dumpsters fixed			X	
No wastes are put in storm drains or sewers	X			
Paper, cans, and plastics are recycled	X			
Smaller volumes of materials and supplies are ordered to avoid waste	X			
City recycling and waste reduction guidelines are followed	X			

Equipment Maintenance

Prevention of spills	X			
Fueling areas covered			X	
Sweep or use other dry methods rather than hosing down the fuel area for cleaning			X	
Signs posted warning against "topping off"			X	
Read and follow the guidelines that apply	X			
Work area kept clean	X			
Inspection for leaks, malfunctions, and staining on or around vehicles and equipment			X	
Oil filters drained before disposal or recycling			X	
All fluids contained or drained from wrecked vehicles or equipment that has to be replaced			X	
Cracked batteries stored in a non-leaking secondary container			X	
Full drip pans or other open containers of used liquids not left sitting around			X	
Organized inventory of materials maintained	X			

Call 832-595-3960 for more information, or go to the City website at www.ci.rosenberg.tx.us

Please record changes to this document in the Updates to Storm Water Pollution Prevention Records.

Are the following conditions met?	Yes	No	N/A	Comments
Recycling of waste materials (e.g. used oil, spent solvents, batteries) labeled and tracked			X	
Drip pans used for vehicles and equipment waiting for maintenance			X	
Parked under cover to prevent exposure to rainfall			X	
Parts or equipment not washed outside			X	
Equipment or vehicles washed in designated areas where wash water is released into sanitary sewer system			X	
Barriers or absorbent pads used to prevent dirty, polluted wash water from entering a storm drain inlet			X	
Wash water contained and recycled. Wash water does not flow into gutter or storm drain.			X	
Spills, leaks, wastes or wash water from vehicles or equipment not allowed to enter the storm drain			X	

Materials Handling and Storage

Handling instructions read and followed for all stored materials	X			
Storage containers are spill-proof; inspected for leaks and routine maintenance performed			X	
Storage tanks and piping systems inspected for leaks or failures and routine maintenance performed			X	
Safeguards (such as berms or secondary containment basins) used against accidental releases of liquids from storage area			X	

City of Rosenberg

Are the following conditions met?	Yes	No	N/A	Comments
Materials stored in appropriate containers	X			
Stored materials protected from rainwater	X			
Materials stored indoors and on pallets, if possible	X			
Materials stored outdoors covered with sheets of plastic or other types of cover			X	
Hazardous materials stored according to federal, state, and local requirements			X	

Spill Prevention

Precautions taken to prevent spills	X			
Sweeping and dry mopping are frequently done to reduce the amount of dirt, fluids, and other residues that accumulate in work areas	X			
Sweeping and dry mopping are done instead of cleaning up with water whenever possible, especially outside	X			
Updated spill prevention plan for facility	X			
Updated spill cleanup plan for facility	X			
Spills cleaned up promptly	X			
Absorbents like sand and special spill cleanup powders on hand to help clean up spills	X			
Rags kept handy for cleanup	X			

City of Rosenberg

Storm Water Pollution Prevention Plan (SWPPP)

Facility Checklist

(To be complete quarterly)

Facility Name: WWTP #1

Address: 2218 Ave G

Phone #: ( ) Fax #: ( )

Date: 4/1/11 Inspector's Name and Title: Steve Thurmond - Utilities Supervisor

Building and Grounds Maintenance

Are the following conditions met?	Yes	No	N/A	Comments
Clean up without water using sweeping or wiping	X			
Spills prevented and cleaned up	X			
Debris and litter cleaned up and not washed into storm drains	X			
Detergents not used in steam or pressure washing			X	
Catch basins and storm drains cleaned regularly			X	
Soil erosion controlled	X			
Lawn clippings, trimmings from trees and other landscaping disposed of properly			X	
Correct types and amounts of fertilizer, herbicides, and/or pesticides for landscaping used			X	
Overwatering avoided			X	
Fertilizers, pesticides, or herbicides not applied during rainy weather			X	

Waste Disposal and Reduction

Trash dumpster lids kept closed			X	
Dropped trash picked up	X			
Dumpster areas swept			X	
Wastes cleaned up with broom instead of water	X			
Liquid wastes kept out of dumpsters			X	

Call 832-595-3960 for more information, or go to the City website at www.ci.rosenberg.tx.us

Please record changes to this document in the Updates to Storm Water Pollution Prevention Records.

City of Rosenberg

Are the following conditions met?	Yes	No	N/A	Comments
Hazardous or harmful wastes kept out of dumpsters or trash containers	X			
Leaking dumpsters fixed			X	
No wastes are put in storm drains or sewers	X			
Paper, cans, and plastics are recycled	X			
Smaller volumes of materials and supplies are ordered to avoid waste	X			
City recycling and waste reduction guidelines are followed	X			

Equipment Maintenance

Prevention of spills	X			
Fueling areas covered			X	
Sweep or use other dry methods rather than hosing down the fuel area for cleaning			X	
Signs posted warning against "topping off"			X	
Read and follow the guidelines that apply	X			
Work area kept clean	X			
Inspection for leaks, malfunctions, and staining on or around vehicles and equipment			X	
Oil filters drained before disposal or recycling			X	
All fluids contained or drained from wrecked vehicles or equipment that has to be replaced			X	
Cracked batteries stored in a non-leaking secondary container			X	
Full drip pans or other open containers of used liquids not left sitting around			X	
Organized inventory of materials maintained	X			

Call 832-595-3960 for more information, or go to the City website at www.ci.rosenberg.tx.us

Please record changes to this document in the Updates to Storm Water Pollution Prevention Records.

Are the following conditions met?	Yes	No	N/A	Comments
Recycling of waste materials (e.g. used oil, spent solvents, batteries) labeled and tracked			N	
Drip pans used for vehicles and equipment waiting for maintenance			N	
Parked under cover to prevent exposure to rainfall			N	
Parts or equipment not washed outside			N	
Equipment or vehicles washed in designated areas where wash water is released into sanitary sewer system			N	
Barriers or absorbent pads used to prevent dirty, polluted wash water from entering a storm drain inlet			N	
Wash water contained and recycled. Wash water does not flow into gutter or storm drain.			N	
Spills, leaks, wastes or wash water from vehicles or equipment not allowed to enter the storm drain			N	

Materials Handling and Storage

Handling instructions read and followed for all stored materials	N			
Storage containers are spill-proof; inspected for leaks and routine maintenance performed	N			
Storage tanks and piping systems inspected for leaks or failures and routine maintenance performed	N			
Safeguards (such as berms or secondary containment basins) used against accidental releases of liquids from storage area			N	

Are the following conditions met?	Yes	No	N/A	Comments
Materials stored in appropriate containers	✓			
Stored materials protected from rainwater	✓			
Materials stored indoors and on pallets, if possible	✓			
Materials stored outdoors covered with sheets of plastic or other types of cover			✓	
Hazardous materials stored according to federal, state, and local requirements	✓			

Spill Prevention

Precautions taken to prevent spills	✓			
Sweeping and dry mopping are frequently done to reduce the amount of dirt, fluids, and other residues that accumulate in work areas	✓			
Sweeping and dry mopping are done instead of cleaning up with water whenever possible, especially outside	✓			
Updated spill prevention plan for facility	✓			
Updated spill cleanup plan for facility	✓			
Spills cleaned up promptly	✓			
Absorbents like sand and special spill cleanup powders on hand to help clean up spills	✓			
Rags kept handy for cleanup	✓			

City of Rosenberg

Storm Water Pollution Prevention Plan (SWPPP)

Facility Checklist

(To be complete quarterly)

Facility Name: WP #2

Address: 1415 Alamo

Phone #: ( ) Fax #: ( )

Date: 4/1/11 Inspector's Name and Title: Steve Loureda - Utilities Supervisor

Building and Grounds Maintenance

Are the following conditions met?	Yes	No	N/A	Comments
Clean up without water using sweeping or wiping	X			
Spills prevented and cleaned up	X			
Debris and litter cleaned up and not washed into storm drains	X			
Detergents not used in steam or pressure washing			X	
Catch basins and storm drains cleaned regularly			X	
Soil erosion controlled	X			
Lawn clippings, trimmings from trees and other landscaping disposed of properly			X	
Correct types and amounts of fertilizer, herbicides, and/or pesticides for landscaping used			X	
Overwatering avoided			X	
Fertilizers, pesticides, or herbicides not applied during rainy weather			X	

Waste Disposal and Reduction

Trash dumpster lids kept closed			X	
Dropped trash picked up	X			
Dumpster areas swept			X	
Wastes cleaned up with broom instead of water	X			
Liquid wastes kept out of dumpsters			X	

Call 832-595-3960 for more information, or go to the City website at www.ci.rosenberg.tx.us

Please record changes to this document in the Updates to Storm Water Pollution Prevention Records.

City of Rosenberg

Are the following conditions met?	Yes	No	N/A	Comments
Hazardous or harmful wastes kept out of dumpsters or trash containers	X			
Leaking dumpsters fixed			X	
No wastes are put in storm drains or sewers	X			
Paper, cans, and plastics are recycled	X			
Smaller volumes of materials and supplies are ordered to avoid waste	X			
City recycling and waste reduction guidelines are followed	X			

Equipment Maintenance

Prevention of spills	X			
Fueling areas covered			X	
Sweep or use other dry methods rather than hosing down the fuel area for cleaning			X	
Signs posted warning against "topping off"			X	
Read and follow the guidelines that apply	X			
Work area kept clean	X			
Inspection for leaks, malfunctions, and staining on or around vehicles and equipment			X	
Oil filters drained before disposal or recycling			X	
All fluids contained or drained from wrecked vehicles or equipment that has to be replaced			X	
Cracked batteries stored in a non-leaking secondary container			X	
Full drip pans or other open containers of used liquids not left sitting around			X	
Organized inventory of materials maintained	X			

Call 832-595-3960 for more information, or go to the City website at www.ci.rosenberg.tx.us

Please record changes to this document in the Updates to Storm Water Pollution Prevention Records.

Are the following conditions met?	Yes	No	N/A	Comments
Recycling of waste materials (e.g. used oil, spent solvents, batteries) labeled and tracked			X	
Drip pans used for vehicles and equipment waiting for maintenance			X	
Parked under cover to prevent exposure to rainfall			X	
Parts or equipment not washed outside			X	
Equipment or vehicles washed in designated areas where wash water is released into sanitary sewer system			X	
Barriers or absorbent pads used to prevent dirty, polluted wash water from entering a storm drain inlet			X	
Wash water contained and recycled. Wash water does not flow into gutter or storm drain.			X	
Spills, leaks, wastes or wash water from vehicles or equipment not allowed to enter the storm drain			X	

Materials Handling and Storage

Handling instructions read and followed for all stored materials	X			
Storage containers are spill-proof; inspected for leaks and routine maintenance performed	X			
Storage tanks and piping systems inspected for leaks or failures and routine maintenance performed		X		Seal Leaking on Booster Pump
Safeguards (such as berms or secondary containment basins) used against accidental releases of liquids from storage area			X	

Are the following conditions met?	Yes	No	N/A	Comments
Materials stored in appropriate containers	X			
Stored materials protected from rainwater	X			
Materials stored indoors and on pallets, if possible	X			
Materials stored outdoors covered with sheets of plastic or other types of cover			X	
Hazardous materials stored according to federal, state, and local requirements	X			

Spill Prevention

Precautions taken to prevent spills	X			
Sweeping and dry mopping are frequently done to reduce the amount of dirt, fluids, and other residues that accumulate in work areas	X			
Sweeping and dry mopping are done instead of cleaning up with water whenever possible, especially outside	X			
Updated spill prevention plan for facility	X			
Updated spill cleanup plan for facility	X			
Spills cleaned up promptly	X			
Absorbents like sand and special spill cleanup powders on hand to help clean up spills	X			
Rags kept handy for cleanup	X			

City of Rosenberg

Storm Water Pollution Prevention Plan (SWPPP)

Facility Checklist

(To be complete quarterly)

Facility Name: WP# 3

Address: 1024 GRUNWALD

Phone #: ( ) Fax #: ( )

Date: 4/1/11 Inspector's Name and Title: Steve Vaverka - Utilities Supervisor

Building and Grounds Maintenance

Are the following conditions met?	Yes	No	N/A	Comments
Clean up without water using sweeping or wiping	X			
Spills prevented and cleaned up	X			
Debris and litter cleaned up and not washed into storm drains	X			
Detergents not used in steam or pressure washing			X	
Catch basins and storm drains cleaned regularly			X	
Soil erosion controlled	X			
Lawn clippings, trimmings from trees and other landscaping disposed of properly			X	
Correct types and amounts of fertilizer, herbicides, and/or pesticides for landscaping used			X	
Overwatering avoided			X	
Fertilizers, pesticides, or herbicides not applied during rainy weather			X	

Waste Disposal and Reduction

Trash dumpster lids kept closed			X	
Dropped trash picked up	X			
Dumpster areas swept			X	
Wastes cleaned up with broom instead of water	X			
Liquid wastes kept out of dumpsters			X	

Call 832-595-3960 for more information, or go to the City website at www.ci.rosenberg.tx.us

Please record changes to this document in the Updates to Storm Water Pollution Prevention Records.

Are the following conditions met?	Yes	No	N/A	Comments
Hazardous or harmful wastes kept out of dumpsters or trash containers	X			
Leaking dumpsters fixed			X	
No wastes are put in storm drains or sewers	X			
Paper, cans, and plastics are recycled	X			
Smaller volumes of materials and supplies are ordered to avoid waste	X			
City recycling and waste reduction guidelines are followed	X			

Equipment Maintenance

Prevention of spills	X			
Fueling areas covered			X	
Sweep or use other dry methods rather than hosing down the fuel area for cleaning			X	
Signs posted warning against "topping off"			X	
Read and follow the guidelines that apply	X			
Work area kept clean	X			
Inspection for leaks, malfunctions, and staining on or around vehicles and equipment			X	
Oil filters drained before disposal or recycling			X	
All fluids contained or drained from wrecked vehicles or equipment that has to be replaced			X	
Cracked batteries stored in a non-leaking secondary container			X	
Full drip pans or other open containers of used liquids not left sitting around			X	
Organized inventory of materials maintained	X			

Call 832-595-3960 for more information, or go to the City website at www.ci.rosenberg.tx.us

Please record changes to this document in the Updates to Storm Water Pollution Prevention Records.

Are the following conditions met?	Yes	No	N/A	Comments
Recycling of waste materials (e.g. used oil, spent solvents, batteries) labeled and tracked			X	
Drip pans used for vehicles and equipment waiting for maintenance			X	
Parked under cover to prevent exposure to rainfall			X	
Parts or equipment not washed outside			X	
Equipment or vehicles washed in designated areas where wash water is released into sanitary sewer system			X	
Barriers or absorbent pads used to prevent dirty, polluted wash water from entering a storm drain inlet			X	
Wash water contained and recycled. Wash water does not flow into gutter or storm drain.			X	
Spills, leaks, wastes or wash water from vehicles or equipment not allowed to enter the storm drain			X	

Materials Handling and Storage

Handling instructions read and followed for all stored materials	X			
Storage containers are spill-proof; inspected for leaks and routine maintenance performed	X			
Storage tanks and piping systems inspected for leaks or failures and routine maintenance performed	X			
Safeguards (such as berms or secondary containment basins) used against accidental releases of liquids from storage area			X	

Are the following conditions met?	Yes	No	N/A	Comments
Materials stored in appropriate containers	X			
Stored materials protected from rainwater	X			
Materials stored indoors and on pallets, if possible	X			
Materials stored outdoors covered with sheets of plastic or other types of cover			X	
Hazardous materials stored according to federal, state, and local requirements	X			

Spill Prevention

Precautions taken to prevent spills	X			
Sweeping and dry mopping are frequently done to reduce the amount of dirt, fluids, and other residues that accumulate in work areas	X			
Sweeping and dry mopping are done instead of cleaning up with water whenever possible, especially outside	X			
Updated spill prevention plan for facility	X			
Updated spill cleanup plan for facility	X			
Spills cleaned up promptly	X			
Absorbents like sand and special spill cleanup powders on hand to help clean up spills	X			
Rags kept handy for cleanup	X			

City of Rosenberg

Storm Water Pollution Prevention Plan (SWPPP)

Facility Checklist

(To be complete quarterly)

Facility Name: WP#4

Address: 3720 AIRPORT RD

Phone #: (___)_____ Fax #: (___)_____

Date: 4/1/11 Inspector's Name and Title: Steve Vavreda - Utilities Supervisor

Building and Grounds Maintenance

Are the following conditions met?	Yes	No	N/A	Comments
Clean up without water using sweeping or wiping	X			
Spills prevented and cleaned up	X			
Debris and litter cleaned up and not washed into storm drains	X			
Detergents not used in steam or pressure washing			X	
Catch basins and storm drains cleaned regularly			X	
Soil erosion controlled	X			
Lawn clippings, trimmings from trees and other landscaping disposed of properly			X	
Correct types and amounts of fertilizer, herbicides, and/or pesticides for landscaping used			X	
Overwatering avoided			X	
Fertilizers, pesticides, or herbicides not applied during rainy weather			X	

Waste Disposal and Reduction

Trash dumpster lids kept closed			X	
Dropped trash picked up	X			
Dumpster areas swept			X	
Wastes cleaned up with broom instead of water	X			
Liquid wastes kept out of dumpsters			X	

Call 832-595-3960 for more information, or go to the City website at www.ci.rosenberg.tx.us

Please record changes to this document in the Updates to Storm Water Pollution Prevention Records.

City of Rosenberg

Are the following conditions met?	Yes	No	N/A	Comments
Hazardous or harmful wastes kept out of dumpsters or trash containers	X			
Leaking dumpsters fixed			X	
No wastes are put in storm drains or sewers	X			
Paper, cans, and plastics are recycled	X			
Smaller volumes of materials and supplies are ordered to avoid waste	X			
City recycling and waste reduction guidelines are followed	X			

Equipment Maintenance

Prevention of spills	X			
Fueling areas covered			X	
Sweep or use other dry methods rather than hosing down the fuel area for cleaning			X	
Signs posted warning against "topping off"			X	
Read and follow the guidelines that apply	X			
Work area kept clean	X			
Inspection for leaks, malfunctions, and staining on or around vehicles and equipment			X	
Oil filters drained before disposal or recycling			X	
All fluids contained or drained from wrecked vehicles or equipment that has to be replaced			X	
Cracked batteries stored in a non-leaking secondary container			X	
Full drip pans or other open containers of used liquids not left sitting around			X	
Organized inventory of materials maintained	X			

Call 832-595-3960 for more information, or go to the City website at www.ci.rosenberg.tx.us

Please record changes to this document in the Updates to Storm Water Pollution Prevention Records.

Are the following conditions met?	Yes	No	N/A	Comments
Recycling of waste materials (e.g. used oil, spent solvents, batteries) labeled and tracked			X	
Drip pans used for vehicles and equipment waiting for maintenance			X	
Parked under cover to prevent exposure to rainfall			X	
Parts or equipment not washed outside			X	
Equipment or vehicles washed in designated areas where wash water is released into sanitary sewer system			X	
Barriers or absorbent pads used to prevent dirty, polluted wash water from entering a storm drain inlet			X	
Wash water contained and recycled. Wash water does not flow into gutter or storm drain.			X	
Spills, leaks, wastes or wash water from vehicles or equipment not allowed to enter the storm drain			X	

Materials Handling and Storage

Handling instructions read and followed for all stored materials	X			
Storage containers are spill-proof; inspected for leaks and routine maintenance performed	X			
Storage tanks and piping systems inspected for leaks or failures and routine maintenance performed	X			
Safeguards (such as berms or secondary containment basins) used against accidental releases of liquids from storage area			X	

City of Rosenberg

Are the following conditions met?	Yes	No	N/A	Comments
Materials stored in appropriate containers	X			
Stored materials protected from rainwater	X			
Materials stored indoors and on pallets, if possible	X			
Materials stored outdoors covered with sheets of plastic or other types of cover			X	
Hazardous materials stored according to federal, state, and local requirements	X			

Spill Prevention

Precautions taken to prevent spills	X			
Sweeping and dry mopping are frequently done to reduce the amount of dirt, fluids, and other residues that accumulate in work areas	X			
Sweeping and dry mopping are done instead of cleaning up with water whenever possible, especially outside	X			
Updated spill prevention plan for facility	X			
Updated spill cleanup plan for facility	X			
Spills cleaned up promptly	X			
Absorbents like sand and special spill cleanup powders on hand to help clean up spills	X			
Rags kept handy for cleanup	X			

City of Rosenberg

Storm Water Pollution Prevention Plan (SWPPP)

Facility Checklist

(To be complete quarterly)

Facility Name: WPHS

Address: 401 Cottonwood Church Rd.

Phone #: ( ) Fax #: ( )

Date: 4/1/11 Inspector's Name and Title: Steve Kuroda - Utilities Supervisor

Building and Grounds Maintenance

Are the following conditions met?	Yes	No	N/A	Comments
Clean up without water using sweeping or wiping	X			
Spills prevented and cleaned up	X			
Debris and litter cleaned up and not washed into storm drains	X			
Detergents not used in steam or pressure washing			X	
Catch basins and storm drains cleaned regularly			X	
Soil erosion controlled	X			
Lawn clippings, trimmings from trees and other landscaping disposed of properly			X	
Correct types and amounts of fertilizer, herbicides, and/or pesticides for landscaping used			X	
Overwatering avoided			X	
Fertilizers, pesticides, or herbicides not applied during rainy weather			X	

Waste Disposal and Reduction

Trash dumpster lids kept closed			X	
Dropped trash picked up	X			
Dumpster areas swept			X	
Wastes cleaned up with broom instead of water	X			
Liquid wastes kept out of dumpsters			X	

Call 832-595-3960 for more information, or go to the City website at www.ci.rosenberg.tx.us

Please record changes to this document in the Updates to Storm Water Pollution Prevention Records.

Are the following conditions met?	Yes	No	N/A	Comments
Hazardous or harmful wastes kept out of dumpsters or trash containers	✓			
Leaking dumpsters fixed			✓	
No wastes are put in storm drains or sewers	✓			
Paper, cans, and plastics are recycled	✓			
Smaller volumes of materials and supplies are ordered to avoid waste	✓			
City recycling and waste reduction guidelines are followed	✓			

Equipment Maintenance

Prevention of spills	✓			
Fueling areas covered			✓	
Sweep or use other dry methods rather than hosing down the fuel area for cleaning			✓	
Signs posted warning against "topping off"			✓	
Read and follow the guidelines that apply	✓			
Work area kept clean	✓			
Inspection for leaks, malfunctions, and staining on or around vehicles and equipment			✓	
Oil filters drained before disposal or recycling			✓	
All fluids contained or drained from wrecked vehicles or equipment that has to be replaced			✓	
Cracked batteries stored in a non-leaking secondary container			✓	
Full drip pans or other open containers of used liquids not left sitting around			✓	
Organized inventory of materials maintained	✓			

Are the following conditions met?	Yes	No	N/A	Comments
Recycling of waste materials (e.g. used oil, spent solvents, batteries) labeled and tracked			X	
Drip pans used for vehicles and equipment waiting for maintenance			X	
Parked under cover to prevent exposure to rainfall			X	
Parts or equipment not washed outside			X	
Equipment or vehicles washed in designated areas where wash water is released into sanitary sewer system			X	
Barriers or absorbent pads used to prevent dirty, polluted wash water from entering a storm drain inlet			X	
Wash water contained and recycled. Wash water does not flow into gutter or storm drain.			X	
Spills, leaks, wastes or wash water from vehicles or equipment not allowed to enter the storm drain			X	

Materials Handling and Storage

Handling instructions read and followed for all stored materials	X			
Storage containers are spill-proof; inspected for leaks and routine maintenance performed	X			
Storage tanks and piping systems inspected for leaks or failures and routine maintenance performed	X			
Safeguards (such as berms or secondary containment basins) used against accidental releases of liquids from storage area			X	

Are the following conditions met?	Yes	No	N/A	Comments
Materials stored in appropriate containers	X			
Stored materials protected from rainwater	X			
Materials stored indoors and on pallets, if possible	X			
Materials stored outdoors covered with sheets of plastic or other types of cover			X	
Hazardous materials stored according to federal, state, and local requirements	X			

Spill Prevention

Precautions taken to prevent spills	X			
Sweeping and dry mopping are frequently done to reduce the amount of dirt, fluids, and other residues that accumulate in work areas	X			
Sweeping and dry mopping are done instead of cleaning up with water whenever possible, especially outside	X			
Updated spill prevention plan for facility	X			
Updated spill cleanup plan for facility	X			
Spills cleaned up promptly	X			
Absorbents like sand and special spill cleanup powders on hand to help clean up spills	X			
Rags kept handy for cleanup	X			

City of Rosenberg

Storm Water Pollution Prevention Plan (SWPPP)

Facility Checklist

(To be complete quarterly)

Facility Name: WP#6

Address: 7075 READING RD.

Phone #: (___)_____ Fax #: (___)_____

Date: 4/1/11 Inspector's Name and Title: Steve Vanovella - Utilities Supervisor

Building and Grounds Maintenance

Are the following conditions met?	Yes	No	N/A	Comments
Clean up without water using sweeping or wiping	X			
Spills prevented and cleaned up	X			
Debris and litter cleaned up and not washed into storm drains	X			
Detergents not used in steam or pressure washing			X	
Catch basins and storm drains cleaned regularly	X			
Soil erosion controlled	X			
Lawn clippings, trimmings from trees and other landscaping disposed of properly			X	
Correct types and amounts of fertilizer, herbicides, and/or pesticides for landscaping used			X	
Overwatering avoided			X	
Fertilizers, pesticides, or herbicides not applied during rainy weather			X	

Waste Disposal and Reduction

Trash dumpster lids kept closed			X	
Dropped trash picked up	X			
Dumpster areas swept			X	
Wastes cleaned up with broom instead of water	X			
Liquid wastes kept out of dumpsters			X	

Form Updated 6/10/09

Call 832-595-3960 for more information, or go to the City website at www.ci.rosenberg.tx.us

Please record changes to this document in the Updates to Storm Water Pollution Prevention Records.

City of Rosenberg

Are the following conditions met?	Yes	No	N/A	Comments
Hazardous or harmful wastes kept out of dumpsters or trash containers			X	
Leaking dumpsters fixed			X	
No wastes are put in storm drains or sewers	X			
Paper, cans, and plastics are recycled	X			
Smaller volumes of materials and supplies are ordered to avoid waste	X			
City recycling and waste reduction guidelines are followed	X			

Equipment Maintenance

Prevention of spills	X			
Fueling areas covered			X	
Sweep or use other dry methods rather than hosing down the fuel area for cleaning			X	
Signs posted warning against "topping off"			X	
Read and follow the guidelines that apply			X	
Work area kept clean	X			
Inspection for leaks, malfunctions, and staining on or around vehicles and equipment			X	
Oil filters drained before disposal or recycling			X	
All fluids contained or drained from wrecked vehicles or equipment that has to be replaced			X	
Cracked batteries stored in a non-leaking secondary container			X	
Full drip pans or other open containers of used liquids not left sitting around			X	
Organized inventory of materials maintained	X			

Call 832-595-3960 for more information, or go to the City website at www.ci.rosenberg.tx.us

Please record changes to this document in the Updates to Storm Water Pollution Prevention Records.

City of Rosenberg

Are the following conditions met?	Yes	No	N/A	Comments
Recycling of waste materials (e.g. used oil, spent solvents, batteries) labeled and tracked			X	
Drip pans used for vehicles and equipment waiting for maintenance			X	
Parked under cover to prevent exposure to rainfall			X	
Parts or equipment not washed outside			X	
Equipment or vehicles washed in designated areas where wash water is released into sanitary sewer system			X	
Barriers or absorbent pads used to prevent dirty, polluted wash water from entering a storm drain inlet			X	
Wash water contained and recycled. Wash water does not flow into gutter or storm drain.			X	
Spills, leaks, wastes or wash water from vehicles or equipment not allowed to enter the storm drain			X	

Materials Handling and Storage

Handling instructions read and followed for all stored materials	X			
Storage containers are spill-proof; inspected for leaks and routine maintenance performed	X			
Storage tanks and piping systems inspected for leaks or failures and routine maintenance performed	X			
Safeguards (such as berms or secondary containment basins) used against accidental releases of liquids from storage area			X	

Call 832-595-3960 for more information, or go to the City website at www.ci.rosenberg.tx.us

Please record changes to this document in the Updates to Storm Water Pollution Prevention Records.

Are the following conditions met?	Yes	No	N/A	Comments
Materials stored in appropriate containers	X			
Stored materials protected from rainwater	X			
Materials stored indoors and on pallets, if possible	X			
Materials stored outdoors covered with sheets of plastic or other types of cover			X	
Hazardous materials stored according to federal, state, and local requirements	X			

Spill Prevention

Precautions taken to prevent spills	X			
Sweeping and dry mopping are frequently done to reduce the amount of dirt, fluids, and other residues that accumulate in work areas	X			
Sweeping and dry mopping are done instead of cleaning up with water whenever possible, especially outside	X			
Updated spill prevention plan for facility	X			
Updated spill cleanup plan for facility	X			
Spills cleaned up promptly	X			
Absorbents like sand and special spill cleanup powders on hand to help clean up spills	X			
Rags kept handy for cleanup	X			

City of Rosenberg

Storm Water Pollution Prevention Plan (SWPPP)

Facility Checklist

(To be complete quarterly)

Facility Name: WP#7

Address: 4926 OAK BRIAR LN

Phone #: (___) _____ Fax #: (___) _____

Date: 4/ 11 Inspector's Name and Title: Steve Vavreda – Utilities Supervisor

Building and Grounds Maintenance

Are the following conditions met?	Yes	No	N/A	Comments
Clean up without water using sweeping or wiping	X			
Spills prevented and cleaned up	X			
Debris and litter cleaned up and not washed into storm drains	X			
Detergents not used in steam or pressure washing			X	
Catch basins and storm drains cleaned regularly			X	
Soil erosion controlled	X			
Lawn clippings, trimmings from trees and other landscaping disposed of properly			X	
Correct types and amounts of fertilizer, herbicides, and/or pesticides for landscaping used			X	
Overwatering avoided			X	
Fertilizers, pesticides, or herbicides not applied during rainy weather			X	

Waste Disposal and Reduction

Trash dumpster lids kept closed			X	
Dropped trash picked up	X			
Dumpster areas swept			X	
Wastes cleaned up with broom instead of water	X			
Liquid wastes kept out of dumpsters			X	

Call 832-595-3960 for more information, or go to the City website at www.ci.rosenberg.tx.us

Please record changes to this document in the Updates to Storm Water Pollution Prevention Records.

Are the following conditions met?	Yes	No	N/A	Comments
Hazardous or harmful wastes kept out of dumpsters or trash containers	X			
Leaking dumpsters fixed			X	
No wastes are put in storm drains or sewers	X			
Paper, cans, and plastics are recycled	X			
Smaller volumes of materials and supplies are ordered to avoid waste	X			
City recycling and waste reduction guidelines are followed	X			

Equipment Maintenance

Prevention of spills	X			
Fueling areas covered			X	
Sweep or use other dry methods rather than hosing down the fuel area for cleaning			X	
Signs posted warning against "topping off"			X	
Read and follow the guidelines that apply	X			
Work area kept clean	X			
Inspection for leaks, malfunctions, and staining on or around vehicles and equipment			X	
Oil filters drained before disposal or recycling			X	
All fluids contained or drained from wrecked vehicles or equipment that has to be replaced			X	
Cracked batteries stored in a non-leaking secondary container			X	
Full drip pans or other open containers of used liquids not left sitting around			X	
Organized inventory of materials maintained	X			

Are the following conditions met?	Yes	No	N/A	Comments
Recycling of waste materials (e.g. used oil, spent solvents, batteries) labeled and tracked			X	
Drip pans used for vehicles and equipment waiting for maintenance			X	
Parked under cover to prevent exposure to rainfall			X	
Parts or equipment not washed outside			X	
Equipment or vehicles washed in designated areas where wash water is released into sanitary sewer system			X	
Barriers or absorbent pads used to prevent dirty, polluted wash water from entering a storm drain inlet			X	
Wash water contained and recycled. Wash water does not flow into gutter or storm drain.			X	
Spills, leaks, wastes or wash water from vehicles or equipment not allowed to enter the storm drain			X	

Materials Handling and Storage

Handling instructions read and followed for all stored materials	X			
Storage containers are spill-proof; inspected for leaks and routine maintenance performed	X			
Storage tanks and piping systems inspected for leaks or failures and routine maintenance performed	X			
Safeguards (such as berms or secondary containment basins) used against accidental releases of liquids from storage area			X	

Call 832-595-3960 for more information, or go to the City website at www.ci.rosenberg.tx.us

Please record changes to this document in the Updates to Storm Water Pollution Prevention Records.

Are the following conditions met?	Yes	No	N/A	Comments
Materials stored in appropriate containers	✓			
Stored materials protected from rainwater	✓			
Materials stored indoors and on pallets, if possible	✓			
Materials stored outdoors covered with sheets of plastic or other types of cover			✓	
Hazardous materials stored according to federal, state, and local requirements			✓	

Spill Prevention

Precautions taken to prevent spills	✓			
Sweeping and dry mopping are frequently done to reduce the amount of dirt, fluids, and other residues that accumulate in work areas	✓			
Sweeping and dry mopping are done instead of cleaning up with water whenever possible, especially outside	✓			
Updated spill prevention plan for facility	✓			
Updated spill cleanup plan for facility	✓			
Spills cleaned up promptly	✓			
Absorbents like sand and special spill cleanup powders on hand to help clean up spills	✓			
Rags kept handy for cleanup	✓			

City of Rosenberg

Storm Water Pollution Prevention Plan (SWPPP)

Facility Checklist

Facility Name: Rosenberg Fire Administration
Address: 1012 Fifth St

Phone #: (832) 595-3600 Fax #: (832) 595-3601

Date: 4/1/11 Inspector's Name and Title: Darrell Himly Asst. Fire Chief

Building and Grounds Maintenance

Are the following conditions met?	Yes	No	N/A	Comments
Clean up without water using sweeping or wiping	✓			
Spills prevented and cleaned up	✓			
Debris and litter cleaned up and not washed into storm drains	✓			
Detergents not used in steam or pressure washing			✓	
Catch basins and storm drains cleaned regularly			✓	
Soil erosion controlled	✓			
Lawn clippings, trimmings from trees and other landscaping disposed of properly	✓			
Correct types and amounts of fertilizer, herbicides, and/or pesticides for landscaping used			✓	
Overwatering avoided	✓			
Fertilizers, pesticides, or herbicides not applied during rainy weather			✓	

Waste Disposal and Reduction

Trash dumpster lids kept closed			✓	
Dropped trash picked up	✓			
Dumpster areas swept			✓	
Wastes cleaned up with broom instead of water	✓			
Liquid wastes kept out of dumpsters	✓			

Form Updated 12/11/08

Call 832-595-3960 for more information, or go to the City website at www.ci.rosenberg.tx.us

Please record changes to this document in the Updates to Storm Water Pollution Prevention Records.

City of Rosenberg

Are the following conditions met?	Yes	No	N/A	Comments
Hazardous or harmful wastes kept out of dumpsters or trash containers	✓			
Leaking dumpsters fixed			✓	
No wastes are put in storm drains or sewers	✓			
Paper, cans, glass and plastics are recycled	✓			
Smaller volumes of materials and supplies are ordered to avoid waste	✓			
Washable drinking cups are used in the office	✓			
City recycling and waste reduction guidelines are followed	✓			

Equipment Maintenance

Prevention of spills	✓			
Fueling areas covered			✓	
Sweep or use other dry methods rather than hosing down the fuel area for cleaning			✓	
Signs posted warning against "topping off"			✓	
Read and follow the guidelines that apply			✓	
Work area kept clean	✓			
Inspection for leaks, malfunctions, and staining on or around vehicles and equipment	✓			
Oil filters drained before disposal or recycling			✓	
All fluids contained or drained from wrecked vehicles or equipment that has to be replaced			✓	
Cracked batteries stored in a non-leaking secondary container			✓	
Full drip pans or other open containers of used liquids not left sitting around			✓	
Organized inventory of materials maintained	✓			

Form Updated 12/11/08

Call 832-595-3960 for more information, or go to the City website at www.ci.rosenberg.tx.us

Please record changes to this document in the Updates to Storm Water Pollution Prevention Records.

City of Rosenberg

Are the following conditions met?	Yes	No	N/A	Comments
Recycling of waste materials (e.g. used oil, spent solvents, batteries) labeled and tracked			✓	
Drip pans used for vehicles and equipment waiting for maintenance			✓	
Parked under cover to prevent exposure to rainfall	✓			
Parts or equipment not washed outside			✓	
Equipment or vehicles washed in designated areas where wash water is released into sanitary sewer system	✓			Use Biodegradeable SOAP
Barriers or absorbent pads used to prevent dirty, polluted wash water from entering a storm drain inlet		✓		
Wash water contained and recycled. Wash water does not flow into gutter or storm drain.		✓		
Spills, leaks, wastes or wash water from vehicles or equipment not allowed to enter the storm drain		✓		

Materials Handling and Storage

Handling instructions read and followed for all stored materials	✓			
Storage containers are spill-proof; inspected for leaks and routine maintenance performed			✓	
Storage tanks and piping systems inspected for leaks or failures and routine maintenance performed			✓	
Safeguards (such as berms or secondary containment basins) used against accidental releases of liquids from storage area			✓	

Form Updated 12/11/08

Call 832-595-3960 for more information, or go to the City website at www.ci.rosenberg.tx.us

Please record changes to this document in the Updates to Storm Water Pollution Prevention Records.

City of Rosenberg

Are the following conditions met?	Yes	No	N/A	Comments
Materials stored in appropriate containers	✓			
Stored materials protected from rainwater	✓			
Materials stored indoors and on pallets, if possible	✓			
Materials stored outdoors covered with sheets of plastic or other types of cover			✓	
Hazardous materials stored according to federal, state, and local requirements	✓			

Spill Prevention

Precautions taken to prevent spills	✓			
Sweeping and dry mopping are frequently done to reduce the amount of dirt, fluids, and other residues that accumulate in work areas	✓			
Sweeping and dry mopping are done instead of cleaning up with water whenever possible, especially outside	✓			
Updated spill prevention plan for facility	✓			City Intranet
Updated spill cleanup plan for facility	✓			
Spills cleaned up promptly	✓			
Absorbents like sand and special spill cleanup powders on hand to help clean up spills	✓			
Rags kept handy for cleanup	✓			

Form Updated 12/11/08

Call 832-595-3960 for more information, or go to the City website at www.ci.rosenberg.tx.us

Please record changes to this document in the Updates to Storm Water Pollution Prevention Records.

City of Rosenberg

Storm Water Pollution Prevention Plan (SWPPP)

Facility Checklist

Facility Name: Rosenberg Fire Station 1
Address: 1021 Fourth St

Phone #: (832) 595-3600 Fax #: (832) 595-3601

Date: 3/1/11 Inspector's Name and Title: Darrell Hinly Asst Fire Chief

Building and Grounds Maintenance

Are the following conditions met?	Yes	No	N/A	Comments
Clean up without water using sweeping or wiping	✓			
Spills prevented and cleaned up	✓			
Debris and litter cleaned up and not washed into storm drains	✓			
Detergents not used in steam or pressure washing	✓			
Catch basins and storm drains cleaned regularly	✓			
Soil erosion controlled	✓			
Lawn clippings, trimmings from trees and other landscaping disposed of properly	✓			
Correct types and amounts of fertilizer, herbicides, and/or pesticides for landscaping used			✓	
Overwatering avoided			✓	
Fertilizers, pesticides, or herbicides not applied during rainy weather			✓	

Waste Disposal and Reduction

Trash dumpster lids kept closed	✓			
Dropped trash picked up	✓			
Dumpster areas swept	✓			
Wastes cleaned up with broom instead of water	✓			
Liquid wastes kept out of dumpsters	✓			

Form Updated 12/11/08

Call 832-595-3960 for more information, or go to the City website at www.ci.rosenberg.tx.us

Please record changes to this document in the Updates to Storm Water Pollution Prevention Records.

City of Rosenberg

Are the following conditions met?	Yes	No	N/A	Comments
Hazardous or harmful wastes kept out of dumpsters or trash containers	✓			
Leaking dumpsters fixed			✓	Contract
No wastes are put in storm drains or sewers	✓			
Paper, cans, glass and plastics are recycled	✓			
Smaller volumes of materials and supplies are ordered to avoid waste	✓			
Washable drinking cups are used in the office	✓			
City recycling and waste reduction guidelines are followed	✓			

Equipment Maintenance

Prevention of spills	✓			
Fueling areas covered			✓	
Sweep or use other dry methods rather than hosing down the fuel area for cleaning			✓	
Signs posted warning against "topping off"			✓	
Read and follow the guidelines that apply			✓	
Work area kept clean	✓			
Inspection for leaks, malfunctions, and staining on or around vehicles and equipment	✓			
Oil filters drained before disposal or recycling	N/A		✓	
All fluids contained or drained from wrecked vehicles or equipment that has to be replaced			✓	
Cracked batteries stored in a non-leaking secondary container			✓	
Full drip pans or other open containers of used liquids not left sitting around	✓			
Organized inventory of materials maintained	✓			

Form Updated 12/11/08

Call 832-595-3960 for more information, or go to the City website at www.ci.rosenberg.tx.us

Please record changes to this document in the Updates to Storm Water Pollution Prevention Records.

City of Rosenberg

Are the following conditions met?	Yes	No	N/A	Comments
Recycling of waste materials (e.g. used oil, spent solvents, batteries) labeled and tracked			✓	
Drip pans used for vehicles and equipment waiting for maintenance	✓			
Parked under cover to prevent exposure to rainfall	✓			
Parts or equipment not washed outside	✓			
Equipment or vehicles washed in designated areas where wash water is released into sanitary sewer system	✓			Use Bio-degradeable soap
Barriers or absorbent pads used to prevent dirty, polluted wash water from entering a storm drain inlet		✓		
Wash water contained and recycled. Wash water does not flow into gutter or storm drain.		✓		
Spills, leaks, wastes or wash water from vehicles or equipment not allowed to enter the storm drain	N/A	✓		

Materials Handling and Storage

Handling instructions read and followed for all stored materials	✓			
Storage containers are spill-proof; inspected for leaks and routine maintenance performed	✓			
Storage tanks and piping systems inspected for leaks or failures and routine maintenance performed			✓	
Safeguards (such as berms or secondary containment basins) used against accidental releases of liquids from storage area			✓	

Form Updated 12/11/08

Call 832-595-3960 for more information, or go to the City website at www.ci.rosenberg.tx.us

Please record changes to this document in the Updates to Storm Water Pollution Prevention Records.

City of Rosenberg

Are the following conditions met?	Yes	No	N/A	Comments
Materials stored in appropriate containers	✓			
Stored materials protected from rainwater	✓			
Materials stored indoors and on pallets, if possible	✓			
Materials stored outdoors covered with sheets of plastic or other types of cover			✓	
Hazardous materials stored according to federal, state, and local requirements	✓			

Spill Prevention

Precautions taken to prevent spills	✓			
Sweeping and dry mopping are frequently done to reduce the amount of dirt, fluids, and other residues that accumulate in work areas	✓			
Sweeping and dry mopping are done instead of cleaning up with water whenever possible, especially outside	✓			
Updated spill prevention plan for facility	✓			City Intranet
Updated spill cleanup plan for facility	✓			
Spills cleaned up promptly	✓			
Absorbents like sand and special spill cleanup powders on hand to help clean up spills	✓			
Rags kept handy for cleanup	✓			

Form Updated 12/11/08

Call 832-595-3960 for more information, or go to the City website at www.ci.rosenberg.tx.us

Please record changes to this document in the Updates to Storm Water Pollution Prevention Records.

City of Rosenberg

Storm Water Pollution Prevention Plan (SWPPP)

Facility Checklist

Facility Name: Rosenberg Fire Station 2
Address: 10553 Reading Rd

Phone #: (832) 595-3620 Fax #: (832) 595-3622

Date: 4/1/11 Inspector's Name and Title: Darell Hinely Asst. Fire Chief

Building and Grounds Maintenance

Are the following conditions met?	Yes	No	N/A	Comments
Clean up without water using sweeping or wiping	✓			
Spills prevented and cleaned up	✓			
Debris and litter cleaned up and not washed into storm drains	✓			
Detergents not used in steam or pressure washing	✓			
Catch basins and storm drains cleaned regularly	✓			
Soil erosion controlled	✓			
Lawn clippings, trimmings from trees and other landscaping disposed of properly	✓			
Correct types and amounts of fertilizer, herbicides, and/or pesticides for landscaping used			✓	
Overwatering avoided	✓			
Fertilizers, pesticides, or herbicides not applied during rainy weather			✓	

Waste Disposal and Reduction

Trash dumpster lids kept closed	✓			
Dropped trash picked up	✓			
Dumpster areas swept	✓			
Wastes cleaned up with broom instead of water	✓			
Liquid wastes kept out of dumpsters	✓			

Form Updated 12/11/08

Call 832-595-3960 for more information, or go to the City website at www.ci.rosenberg.tx.us

Please record changes to this document in the Updates to Storm Water Pollution Prevention Records.

City of Rosenberg

Are the following conditions met?	Yes	No	N/A	Comments
Recycling of waste materials (e.g. used oil, spent solvents, batteries) labeled and tracked			✓	
Drip pans used for vehicles and equipment waiting for maintenance	✓			
Parked under cover to prevent exposure to rainfall	✓			
Parts or equipment not washed outside	✓			
Equipment or vehicles washed in designated areas where wash water is released into sanitary sewer system	✓			
Barriers or absorbent pads used to prevent dirty, polluted wash water from entering a storm drain inlet	✓		✓	
Wash water contained and recycled. Wash water does not flow into gutter or storm drain.	✓			
Spills, leaks, wastes or wash water from vehicles or equipment not allowed to enter the storm drain	✓			

Materials Handling and Storage

Handling instructions read and followed for all stored materials	✓			
Storage containers are spill-proof; inspected for leaks and routine maintenance performed	✓			
Storage tanks and piping systems inspected for leaks or failures and routine maintenance performed	✓			
Safeguards (such as berms or secondary containment basins) used against accidental releases of liquids from storage area	✓			

Form Updated 12/11/08

Call 832-595-3960 for more information, or go to the City website at www.ci.rosenberg.tx.us

Please record changes to this document in the Updates to Storm Water Pollution Prevention Records.

City of Rosenberg

Are the following conditions met?	Yes	No	N/A	Comments
Materials stored in appropriate containers	✓			
Stored materials protected from rainwater	✓			
Materials stored indoors and on pallets, if possible	✓			
Materials stored outdoors covered with sheets of plastic or other types of cover			✓	
Hazardous materials stored according to federal, state, and local requirements	✓			

Spill Prevention

Precautions taken to prevent spills	✓			
Sweeping and dry mopping are frequently done to reduce the amount of dirt, fluids, and other residues that accumulate in work areas	✓			
Sweeping and dry mopping are done instead of cleaning up with water whenever possible, especially outside	✓			
Updated spill prevention plan for facility	✓			City Intranet
Updated spill cleanup plan for facility	✓			
Spills cleaned up promptly	✓			
Absorbents like sand and special spill cleanup powders on hand to help clean up spills	✓			
Rags kept handy for cleanup	✓			

City of Rosenberg

Storm Water Pollution Prevention Plan (SWPPP)

Facility Checklist

Facility Name: Rosenberg Civic Center
Address: 3825 SH 36 S.
Rosenberg, Tx 77471
Phone #: (832) 595 3520 Fax #: (832) 595-3521

Date: 5/25/11 Inspector's Name and Title: Carolyn Kagy - Civic Center Mngr.

Building and Grounds Maintenance

Are the following conditions met?	Yes	No	N/A	Comments
Clean up without water using sweeping or wiping	✓			Occasionally pressure wash front entryway &/or dumpster area
Spills prevented and cleaned up	✓			
Debris and litter cleaned up and not washed into storm drains	✓			
Detergents not used in steam or pressure washing	✓			Occasionally use Biodegradable cleaner if needed - dependent on Diet
Catch basins and storm drains cleaned regularly		✓		Need to coordinate/VDN with public works
Soil erosion controlled	✓			
Lawn clippings, trimmings from trees and other landscaping disposed of properly	✓			
Correct types and amounts of fertilizer, herbicides, and/or pesticides for landscaping used	✓			
Overwatering avoided	✓			
Fertilizers, pesticides, or herbicides not applied during rainy weather	✓			

Waste Disposal and Reduction

Trash dumpster lids kept closed		✓		Hard to control - with clients, cleaning crew
Dropped trash picked up	✓			
Dumpster areas swept	✓			
Wastes cleaned up with broom instead of water	✓			
Liquid wastes kept out of dumpsters		✓		Try to - Hard to control with client events

Form Updated 12/11/08

Call 832-595-3960 for more information, or go to the City website at www.ci.rosenberg.tx.us

Please record changes to this document in the Updates to Storm Water Pollution Prevention Records.

City of Rosenberg

Are the following conditions met?	Yes	No	N/A	Comments
Hazardous or harmful wastes kept out of dumpsters or trash containers	✓			
Leaking dumpsters fixed	✓			
No wastes are put in storm drains or sewers	✓			
Paper, cans, glass and plastics are recycled	✓			
Smaller volumes of materials and supplies are ordered to avoid waste	✓			
Washable drinking cups are used in the office	✓			
City recycling and waste reduction guidelines are followed	✓			

Equipment Maintenance

Prevention of spills			✓	
Fueling areas covered			✓	
Sweep or use other dry methods rather than hosing down the fuel area for cleaning			✓	
Signs posted warning against "topping off'			✓	
Read and follow the guidelines that apply			✓	
Work area kept clean			✓	
Inspection for leaks, malfunctions, and staining on or around vehicles and equipment	✓			
Oil filters drained before disposal or recycling			✓	
All fluids contained or drained from wrecked vehicles or equipment that has to be replaced			✓	
Cracked batteries stored in a non-leaking secondary container			✓	
Full drip pans or other open containers of used liquids not left sitting around			✓	
Organized inventory of materials maintained	✓			

Form Updated 12/11/08

Call 832-595-3960 for more information, or go to the City website at www.ci.rosenberg.tx.us

Please record changes to this document in the Updates to Storm Water Pollution Prevention Records.

City of Rosenberg

Are the following conditions met?	Yes	No	N/A	Comments
Recycling of waste materials (e.g. used oil, spent solvents, batteries) labeled and tracked			✓	
Drip pans used for vehicles and equipment waiting for maintenance			✓	
Parked under cover to prevent exposure to rainfall		✓		No Cover Available
Parts or equipment not washed outside			✓	
Equipment or vehicles washed in designated areas where wash water is released into sanitary sewer system		✓		Wash @ back of Civic Center with Biodegradable detergent
Barriers or absorbent pads used to prevent dirty, polluted wash water from entering a storm drain inlet			✓	
Wash water contained and recycled. Wash water does not flow into gutter or storm drain.			✓	
Spills, leaks, wastes or wash water from vehicles or equipment not allowed to enter the storm drain			✓	

Materials Handling and Storage

Handling instructions read and followed for all stored materials	✓			
Storage containers are spill-proof; inspected for leaks and routine maintenance performed	✓			
Storage tanks and piping systems inspected for leaks or failures and routine maintenance performed			✓	
Safeguards (such as berms or secondary containment basins) used against accidental releases of liquids from storage area			✓	

City of Rosenberg

Are the following conditions met?	Yes	No	N/A	Comments
Materials stored in appropriate containers	✓			
Stored materials protected from rainwater	✓			
Materials stored indoors and on pallets, if possible	✓			Metal Cabinet
Materials stored outdoors covered with sheets of plastic or other types of cover			✓	
Hazardous materials stored according to federal, state, and local requirements	✓			

Spill Prevention

Precautions taken to prevent spills	✓			
Sweeping and dry mopping are frequently done to reduce the amount of dirt, fluids, and other residues that accumulate in work areas	✓			
Sweeping and dry mopping are done instead of cleaning up with water whenever possible, especially outside	✓			
Updated spill prevention plan for facility			✓	
Updated spill cleanup plan for facility			✓	
Spills cleaned up promptly	✓			
Absorbents like sand and special spill cleanup powders on hand to help clean up spills			✓	
Rags kept handy for cleanup	✓			

City of Rosenberg

Storm Water Pollution Prevention Plan (SWPPP)

Facility Checklist

(To be complete quarterly)

Facility Name: WWTP#1A

Address: 2700 AVE A

Phone #: ( ) Fax #: ( )

Date: 2/11/11 Inspector's Name and Title: STEVE VAURECKA (UTILITIES SUPV)

Building and Grounds Maintenance

Are the following conditions met?	Yes	No	N/A	Comments
Clean up without water using sweeping or wiping	✓			
Spills prevented and cleaned up	✓			
Debris and litter cleaned up and not washed into storm drains	✓			
Detergents not used in steam or pressure washing			✓	
Catch basins and storm drains cleaned regularly	✓			
Soil erosion controlled	✓			
Lawn clippings, trimmings from trees and other landscaping disposed of properly			✓	
Correct types and amounts of fertilizer, herbicides, and/or pesticides for landscaping used			✓	
Overwatering avoided			✓	
Fertilizers, pesticides, or herbicides not applied during rainy weather	✓			

Waste Disposal and Reduction

Trash dumpster lids kept closed	✓			
Dropped trash picked up	✓			
Dumpster areas swept			✓	
Wastes cleaned up with broom instead of water	✓			
Liquid wastes kept out of dumpsters			✓	

Form Updated 6/10/09

Call 832-595-3960 for more information, or go to the City website at www.ci.rosenberg.tx.us

Please record changes to this document in the Updates to Storm Water Pollution Prevention Records.

City of Rosenberg

Are the following conditions met?	Yes	No	N/A	Comments
Hazardous or harmful wastes kept out of dumpsters or trash containers	✓			
Leaking dumpsters fixed	✓			New Dumpsters
No wastes are put in storm drains or sewers	✓			
Paper, cans, and plastics are recycled	✓			
Smaller volumes of materials and supplies are ordered to avoid waste	✓			
City recycling and waste reduction guidelines are followed	✓			

Equipment Maintenance

Prevention of spills	✓			
Fueling areas covered			✓	
Sweep or use other dry methods rather than hosing down the fuel area for cleaning			✓	
Signs posted warning against "topping off"			✓	
Read and follow the guidelines that apply	✓			
Work area kept clean	✓			
Inspection for leaks, malfunctions, and staining on or around vehicles and equipment			✓	
Oil filters drained before disposal or recycling			✓	
All fluids contained or drained from wrecked vehicles or equipment that has to be replaced			✓	
Cracked batteries stored in a non-leaking secondary container			✓	
Full drip pans or other open containers of used liquids not left sitting around			✓	
Organized inventory of materials maintained	✓			

Are the following conditions met?	Yes	No	N/A	Comments
Recycling of waste materials (e.g. used oil, spent solvents, batteries) labeled and tracked			✓	
Drip pans used for vehicles and equipment waiting for maintenance			✓	
Parked under cover to prevent exposure to rainfall			✓	
Parts or equipment not washed outside			✓	
Equipment or vehicles washed in designated areas where wash water is released into sanitary sewer system	✓			
Barriers or absorbent pads used to prevent dirty, polluted wash water from entering a storm drain inlet			✓	
Wash water contained and recycled. Wash water does not flow into gutter or storm drain.			✓	
Spills, leaks, wastes or wash water from vehicles or equipment not allowed to enter the storm drain			✓	

Materials Handling and Storage

Handling instructions read and followed for all stored materials	✓			
Storage containers are spill-proof; inspected for leaks and routine maintenance performed	✓			
Storage tanks and piping systems inspected for leaks or failures and routine maintenance performed	✓			
Safeguards (such as berms or secondary containment basins) used against accidental releases of liquids from storage area		✓		No SCB for oil Barrels in Shop.

City of Rosenberg

Storm Water Pollution Prevention Plan (SWPPP)

Facility Checklist

(To be complete quarterly)

Facility Name: STORAGE BUILDING
Address: ACROSS FROM WWTP#1A 2700 AVE A

Phone #: (___)_____ Fax #: (___)_____

Date: 7/11/11 Inspector's Name and Title: Steve Vaureda (Utilities Supv)

Building and Grounds Maintenance

Are the following conditions met?	Yes	No	N/A	Comments
Clean up without water using sweeping or wiping	✓			
Spills prevented and cleaned up	✓			
Debris and litter cleaned up and not washed into storm drains	✓			
Detergents not used in steam or pressure washing			✓	
Catch basins and storm drains cleaned regularly	✓			
Soil erosion controlled			✓	
Lawn clippings, trimmings from trees and other landscaping disposed of properly			✓	
Correct types and amounts of fertilizer, herbicides, and/or pesticides for landscaping used			✓	
Overwatering avoided			✓	
Fertilizers, pesticides, or herbicides not applied during rainy weather	✓			

Waste Disposal and Reduction

Trash dumpster lids kept closed			✓	
Dropped trash picked up	✓			
Dumpster areas swept			✓	
Wastes cleaned up with broom instead of water	✓			
Liquid wastes kept out of dumpsters			✓	

Call 832-595-3960 for more information, or go to the City website at www.ci.rosenberg.tx.us

Please record changes to this document in the Updates to Storm Water Pollution Prevention Records.

City of Rosenberg

Are the following conditions met?	Yes	No	N/A	Comments
Hazardous or harmful wastes kept out of dumpsters or trash containers			✓	
Leaking dumpsters fixed			✓	
No wastes are put in storm drains or sewers	✓			
Paper, cans, and plastics are recycled	✓			
Smaller volumes of materials and supplies are ordered to avoid waste	✓			
City recycling and waste reduction guidelines are followed	✓			

Equipment Maintenance

Prevention of spills	✓			
Fueling areas covered			✓	
Sweep or use other dry methods rather than hosing down the fuel area for cleaning			✓	
Signs posted warning against "topping off"			✓	
Read and follow the guidelines that apply	✓			
Work area kept clean	✓			
Inspection for leaks, malfunctions, and staining on or around vehicles and equipment			✓	
Oil filters drained before disposal or recycling			✓	
All fluids contained or drained from wrecked vehicles or equipment that has to be replaced			✓	
Cracked batteries stored in a non-leaking secondary container			✓	
Full drip pans or other open containers of used liquids not left sitting around			✓	
Organized inventory of materials maintained	✓			

Are the following conditions met?	Yes	No	N/A	Comments
Recycling of waste materials (e.g. used oil, spent solvents, batteries) labeled and tracked			✓	
Drip pans used for vehicles and equipment waiting for maintenance			✓	
Parked under cover to prevent exposure to rainfall			✓	
Parts or equipment not washed outside			✓	
Equipment or vehicles washed in designated areas where wash water is released into sanitary sewer system			✓	
Barriers or absorbent pads used to prevent dirty, polluted wash water from entering a storm drain inlet			✓	
Wash water contained and recycled. Wash water does not flow into gutter or storm drain.			✓	
Spills, leaks, wastes or wash water from vehicles or equipment not allowed to enter the storm drain			✓	

Materials Handling and Storage

Handling instructions read and followed for all stored materials	✓			
Storage containers are spill-proof; inspected for leaks and routine maintenance performed			✓	
Storage tanks and piping systems inspected for leaks or failures and routine maintenance performed			✓	
Safeguards (such as berms or secondary containment basins) used against accidental releases of liquids from storage area			✓	

Are the following conditions met?	Yes	No	N/A	Comments
Materials stored in appropriate containers	✓			
Stored materials protected from rainwater	✓			
Materials stored indoors and on pallets, if possible	✓			
Materials stored outdoors covered with sheets of plastic or other types of cover			✓	
Hazardous materials stored according to federal, state, and local requirements			✓	

Spill Prevention

Precautions taken to prevent spills	✓			
Sweeping and dry mopping are frequently done to reduce the amount of dirt, fluids, and other residues that accumulate in work areas	✓			
Sweeping and dry mopping are done instead of cleaning up with water whenever possible, especially outside	✓			
Updated spill prevention plan for facility	✓			
Updated spill cleanup plan for facility	✓			
Spills cleaned up promptly	✓			
Absorbents like sand and special spill cleanup powders on hand to help clean up spills			✓	
Rags kept handy for cleanup	✓			

City of Rosenberg

Storm Water Pollution Prevention Plan (SWPPP)

Facility Checklist

(To be complete quarterly)

Facility Name: WP#1
Address: 2218 Ave G

Phone #: (___)_____ Fax #: (___)_____

Date: 7/11/11 Inspector's Name and Title: Steve Vavrecka (Utilities Supv)

Building and Grounds Maintenance

Are the following conditions met?	Yes	No	N/A	Comments
Clean up without water using sweeping or wiping	✓			
Spills prevented and cleaned up	✓			
Debris and litter cleaned up and not washed into storm drains	✓			
Detergents not used in steam or pressure washing			✓	
Catch basins and storm drains cleaned regularly	✓			
Soil erosion controlled	✓			
Lawn clippings, trimmings from trees and other landscaping disposed of properly			✓	
Correct types and amounts of fertilizer, herbicides, and/or pesticides for landscaping used			✓	
Overwatering avoided			✓	
Fertilizers, pesticides, or herbicides not applied during rainy weather			✓	

Waste Disposal and Reduction

Trash dumpster lids kept closed			✓	
Dropped trash picked up	✓			
Dumpster areas swept			✓	
Wastes cleaned up with broom instead of water	✓			
Liquid wastes kept out of dumpsters			✓	

Form Updated 6/10/09

Call 832-595-3960 for more information, or go to the City website at www.ci.rosenberg.tx.us

Please record changes to this document in the Updates to Storm Water Pollution Prevention Records.

City of Rosenberg

Are the following conditions met?	Yes	No	N/A	Comments
Hazardous or harmful wastes kept out of dumpsters or trash containers	✓			
Leaking dumpsters fixed			✓	
No wastes are put in storm drains or sewers	✓			
Paper, cans, and plastics are recycled	✓			
Smaller volumes of materials and supplies are ordered to avoid waste	✓			
City recycling and waste reduction guidelines are followed	✓			

Equipment Maintenance

Prevention of spills	✓			
Fueling areas covered			✓	
Sweep or use other dry methods rather than hosing down the fuel area for cleaning			✓	
Signs posted warning against "topping off"			✓	
Read and follow the guidelines that apply	✓			
Work area kept clean	✓			
Inspection for leaks, malfunctions, and staining on or around vehicles and equipment			✓	
Oil filters drained before disposal or recycling			✓	
All fluids contained or drained from wrecked vehicles or equipment that has to be replaced			✓	
Cracked batteries stored in a non-leaking secondary container			✓	
Full drip pans or other open containers of used liquids not left sitting around			✓	
Organized inventory of materials maintained	✓			

Are the following conditions met?	Yes	No	N/A	Comments
Recycling of waste materials (e.g. used oil, spent solvents, batteries) labeled and tracked			✓	
Drip pans used for vehicles and equipment waiting for maintenance			✓	
Parked under cover to prevent exposure to rainfall			✓	
Parts or equipment not washed outside			✓	
Equipment or vehicles washed in designated areas where wash water is released into sanitary sewer system			✓	
Barriers or absorbent pads used to prevent dirty, polluted wash water from entering a storm drain inlet			✓	
Wash water contained and recycled. Wash water does not flow into gutter or storm drain.			✓	
Spills, leaks, wastes or wash water from vehicles or equipment not allowed to enter the storm drain			✓	

Materials Handling and Storage

Handling instructions read and followed for all stored materials	✓			
Storage containers are spill-proof; inspected for leaks and routine maintenance performed	✓			
Storage tanks and piping systems inspected for leaks or failures and routine maintenance performed	✓			
Safeguards (such as berms or secondary containment basins) used against accidental releases of liquids from storage area			✓	

Are the following conditions met?	Yes	No	N/A	Comments
Materials stored in appropriate containers	✓			
Stored materials protected from rainwater	✓			
Materials stored indoors and on pallets, if possible	✓			
Materials stored outdoors covered with sheets of plastic or other types of cover			✓	
Hazardous materials stored according to federal, state, and local requirements	✓			

Spill Prevention

Precautions taken to prevent spills	✓			
Sweeping and dry mopping are frequently done to reduce the amount of dirt, fluids, and other residues that accumulate in work areas	✓			
Sweeping and dry mopping are done instead of cleaning up with water whenever possible, especially outside	✓			
Updated spill prevention plan for facility	✓			
Updated spill cleanup plan for facility	✓			
Spills cleaned up promptly	✓			
Absorbents like sand and special spill cleanup powders on hand to help clean up spills	✓			
Rags kept handy for cleanup	✓			

City of Rosenberg

Storm Water Pollution Prevention Plan (SWPPP)

Facility Checklist

(To be complete quarterly)

Facility Name: WP#2

Address: 1415 Alamo

Phone #: (___)_____ Fax #: (___)_____

Date: 7/11/11 Inspector's Name and Title: Steve Vavrecka (Utilities Supv)

Building and Grounds Maintenance

Are the following conditions met?	Yes	No	N/A	Comments
Clean up without water using sweeping or wiping	✓			
Spills prevented and cleaned up	✓			
Debris and litter cleaned up and not washed into storm drains	✓			
Detergents not used in steam or pressure washing			✓	
Catch basins and storm drains cleaned regularly	✓			
Soil erosion controlled	✓			
Lawn clippings, trimmings from trees and other landscaping disposed of properly			✓	
Correct types and amounts of fertilizer, herbicides, and/or pesticides for landscaping used			✓	
Overwatering avoided			✓	
Fertilizers, pesticides, or herbicides not applied during rainy weather			✓	

Waste Disposal and Reduction

Trash dumpster lids kept closed			✓	
Dropped trash picked up	✓			
Dumpster areas swept			✓	
Wastes cleaned up with broom instead of water	✓			
Liquid wastes kept out of dumpsters			✓	

Call 832-595-3960 for more information, or go to the City website at www.ci.rosenberg.tx.us

Please record changes to this document in the Updates to Storm Water Pollution Prevention Records.

City of Rosenberg

Are the following conditions met?	Yes	No	N/A	Comments
Hazardous or harmful wastes kept out of dumpsters or trash containers	✓			
Leaking dumpsters fixed			✓	
No wastes are put in storm drains or sewers	✓			
Paper, cans, and plastics are recycled	✓			
Smaller volumes of materials and supplies are ordered to avoid waste	✓			
City recycling and waste reduction guidelines are followed	✓			

Equipment Maintenance

Prevention of spills	✓			
Fueling areas covered			✓	
Sweep or use other dry methods rather than hosing down the fuel area for cleaning			✓	
Signs posted warning against "topping off"			✓	
Read and follow the guidelines that apply	✓			
Work area kept clean	✓			
Inspection for leaks, malfunctions, and staining on or around vehicles and equipment			✓	
Oil filters drained before disposal or recycling			✓	
All fluids contained or drained from wrecked vehicles or equipment that has to be replaced			✓	
Cracked batteries stored in a non-leaking secondary container			✓	
Full drip pans or other open containers of used liquids not left sitting around			✓	
Organized inventory of materials maintained	✓			

Are the following conditions met?	Yes	No	N/A	Comments
Recycling of waste materials (e.g. used oil, spent solvents, batteries) labeled and tracked			✓	
Drip pans used for vehicles and equipment waiting for maintenance			✓	
Parked under cover to prevent exposure to rainfall			✓	
Parts or equipment not washed outside			✓	
Equipment or vehicles washed in designated areas where wash water is released into sanitary sewer system			✓	
Barriers or absorbent pads used to prevent dirty, polluted wash water from entering a storm drain inlet			✓	
Wash water contained and recycled. Wash water does not flow into gutter or storm drain.			✓	
Spills, leaks, wastes or wash water from vehicles or equipment not allowed to enter the storm drain			✓	

Materials Handling and Storage

Handling instructions read and followed for all stored materials	✓			
Storage containers are spill-proof; inspected for leaks and routine maintenance performed	✓			
Storage tanks and piping systems inspected for leaks or failures and routine maintenance performed	✓			
Safeguards (such as berms or secondary containment basins) used against accidental releases of liquids from storage area			✓	

Are the following conditions met?	Yes	No	N/A	Comments
Materials stored in appropriate containers	✓			
Stored materials protected from rainwater	✓			
Materials stored indoors and on pallets, if possible	✓			
Materials stored outdoors covered with sheets of plastic or other types of cover			✓	
Hazardous materials stored according to federal, state, and local requirements	✓			

Spill Prevention

Precautions taken to prevent spills	✓			
Sweeping and dry mopping are frequently done to reduce the amount of dirt, fluids, and other residues that accumulate in work areas		✓		
Sweeping and dry mopping are done instead of cleaning up with water whenever possible, especially outside	✓			
Updated spill prevention plan for facility	✓			
Updated spill cleanup plan for facility	✓			
Spills cleaned up promptly	✓			
Absorbents like sand and special spill cleanup powders on hand to help clean up spills		✓		
Rags kept handy for cleanup		✓		

City of Rosenberg

Storm Water Pollution Prevention Plan (SWPPP)

Facility Checklist

(To be complete quarterly)

Facility Name: WP#3

Address: 1024 GRUNWALD HEIGHTS

Phone #: (___)_____ Fax #: (___)_____

Date: 7/11/11 Inspector's Name and Title: Steve Valverde (Utilities Supv)

Building and Grounds Maintenance

Are the following conditions met?	Yes	No	N/A	Comments
Clean up without water using sweeping or wiping	✓			
Spills prevented and cleaned up	✓			
Debris and litter cleaned up and not washed into storm drains	✓			
Detergents not used in steam or pressure washing			✓	
Catch basins and storm drains cleaned regularly	✓			
Soil erosion controlled	✓			
Lawn clippings, trimmings from trees and other landscaping disposed of properly			✓	
Correct types and amounts of fertilizer, herbicides, and/or pesticides for landscaping used			✓	
Overwatering avoided			✓	
Fertilizers, pesticides, or herbicides not applied during rainy weather			✓	

Waste Disposal and Reduction

Trash dumpster lids kept closed			✓	
Dropped trash picked up	✓			
Dumpster areas swept			✓	
Wastes cleaned up with broom instead of water	✓			
Liquid wastes kept out of dumpsters			✓	

Form Updated 6/10/09

Call 832-595-3960 for more information, or go to the City website at www.ci.rosenberg.tx.us

Please record changes to this document in the Updates to Storm Water Pollution Prevention Records.

Are the following conditions met?	Yes	No	N/A	Comments
Hazardous or harmful wastes kept out of dumpsters or trash containers	✓			
Leaking dumpsters fixed			✓	
No wastes are put in storm drains or sewers	✓			
Paper, cans, and plastics are recycled	✓			
Smaller volumes of materials and supplies are ordered to avoid waste	✓			
City recycling and waste reduction guidelines are followed	✓			

Equipment Maintenance

Prevention of spills	✓		✓	
Fueling areas covered			✓	
Sweep or use other dry methods rather than hosing down the fuel area for cleaning			✓	
Signs posted warning against "topping off"	✓		✓	
Read and follow the guidelines that apply	✓			
Work area kept clean	✓			
Inspection for leaks, malfunctions, and staining on or around vehicles and equipment			✓	
Oil filters drained before disposal or recycling			✓	
All fluids contained or drained from wrecked vehicles or equipment that has to be replaced			✓	
Cracked batteries stored in a non-leaking secondary container			✓	
Full drip pans or other open containers of used liquids not left sitting around			✓	
Organized inventory of materials maintained	✓			

Are the following conditions met?	Yes	No	N/A	Comments
Recycling of waste materials (e.g. used oil, spent solvents, batteries) labeled and tracked			✓	
Drip pans used for vehicles and equipment waiting for maintenance			✓	
Parked under cover to prevent exposure to rainfall			✓	
Parts or equipment not washed outside			✓	
Equipment or vehicles washed in designated areas where wash water is released into sanitary sewer system			✓	
Barriers or absorbent pads used to prevent dirty, polluted wash water from entering a storm drain inlet			✓	
Wash water contained and recycled. Wash water does not flow into gutter or storm drain.			✓	
Spills, leaks, wastes or wash water from vehicles or equipment not allowed to enter the storm drain			✓	

Materials Handling and Storage

Handling instructions read and followed for all stored materials	✓			
Storage containers are spill-proof; inspected for leaks and routine maintenance performed	✓			
Storage tanks and piping systems inspected for leaks or failures and routine maintenance performed	✓			
Safeguards (such as berms or secondary containment basins) used against accidental releases of liquids from storage area			✓	

Are the following conditions met?	Yes	No	N/A	Comments
Materials stored in appropriate containers	✓			
Stored materials protected from rainwater	✓			
Materials stored indoors and on pallets, if possible	✓			
Materials stored outdoors covered with sheets of plastic or other types of cover			✓	
Hazardous materials stored according to federal, state, and local requirements	✓			

Spill Prevention

Precautions taken to prevent spills	✓			
Sweeping and dry mopping are frequently done to reduce the amount of dirt, fluids, and other residues that accumulate in work areas	✓			
Sweeping and dry mopping are done instead of cleaning up with water whenever possible, especially outside	✓			
Updated spill prevention plan for facility	✓			
Updated spill cleanup plan for facility	✓			
Spills cleaned up promptly	✓			
Absorbents like sand and special spill cleanup powders on hand to help clean up spills	✓			
Rags kept handy for cleanup	✓			

City of Rosenberg

Storm Water Pollution Prevention Plan (SWPPP)

Facility Checklist

(To be complete quarterly)

Facility Name: WPH4

Address: 3220 Airport Rd

Phone #: ( ) Fax #: ( )

Date: 7/11/10 Inspector's Name and Title: Steve Vavrecka (Utilities Supv)

Building and Grounds Maintenance

Are the following conditions met?	Yes	No	N/A	Comments
Clean up without water using sweeping or wiping	✓			
Spills prevented and cleaned up	✓			
Debris and litter cleaned up and not washed into storm drains	✓			
Detergents not used in steam or pressure washing			✓	
Catch basins and storm drains cleaned regularly	✓			
Soil erosion controlled	✓			
Lawn clippings, trimmings from trees and other landscaping disposed of properly			✓	
Correct types and amounts of fertilizer, herbicides, and/or pesticides for landscaping used			✓	
Overwatering avoided			✓	
Fertilizers, pesticides, or herbicides not applied during rainy weather			✓	

Waste Disposal and Reduction

Trash dumpster lids kept closed			✓	
Dropped trash picked up	✓			
Dumpster areas swept			✓	
Wastes cleaned up with broom instead of water	✓			
Liquid wastes kept out of dumpsters			✓	

Form Updated 6/10/09

Call 832-595-3960 for more information, or go to the City website at www.ci.rosenberg.tx.us

Please record changes to this document in the Updates to Storm Water Pollution Prevention Records.

City of Rosenberg

Are the following conditions met?	Yes	No	N/A	Comments
Hazardous or harmful wastes kept out of dumpsters or trash containers	✓			
Leaking dumpsters fixed	✓		✓	
No wastes are put in storm drains or sewers	✓			
Paper, cans, and plastics are recycled	✓			
Smaller volumes of materials and supplies are ordered to avoid waste	✓			
City recycling and waste reduction guidelines are followed	✓			

Equipment Maintenance

Prevention of spills	✓		✓	
Fueling areas covered			✓	
Sweep or use other dry methods rather than hosing down the fuel area for cleaning			✓	
Signs posted warning against "topping off"			✓	
Read and follow the guidelines that apply	✓			
Work area kept clean	✓			
Inspection for leaks, malfunctions, and staining on or around vehicles and equipment			✓	
Oil filters drained before disposal or recycling			✓	
All fluids contained or drained from wrecked vehicles or equipment that has to be replaced			✓	
Cracked batteries stored in a non-leaking secondary container			✓	
Full drip pans or other open containers of used liquids not left sitting around			✓	
Organized inventory of materials maintained	✓			

Form Updated 6/10/09

Call 832-595-3960 for more information, or go to the City website at www.ci.rosenberg.tx.us

Please record changes to this document in the Updates to Storm Water Pollution Prevention Records.

Are the following conditions met?	Yes	No	N/A	Comments
Recycling of waste materials (e.g. used oil, spent solvents, batteries) labeled and tracked			✓	
Drip pans used for vehicles and equipment waiting for maintenance			✓	
Parked under cover to prevent exposure to rainfall			✓	
Parts or equipment not washed outside			✓	
Equipment or vehicles washed in designated areas where wash water is released into sanitary sewer system			✓	
Barriers or absorbent pads used to prevent dirty, polluted wash water from entering a storm drain inlet			✓	
Wash water contained and recycled. Wash water does not flow into gutter or storm drain.			✓	
Spills, leaks, wastes or wash water from vehicles or equipment not allowed to enter the storm drain			✓	

Materials Handling and Storage

Handling instructions read and followed for all stored materials	✓			
Storage containers are spill-proof; inspected for leaks and routine maintenance performed	✓			
Storage tanks and piping systems inspected for leaks or failures and routine maintenance performed	✓			
Safeguards (such as berms or secondary containment basins) used against accidental releases of liquids from storage area			✓	

Are the following conditions met?	Yes	No	N/A	Comments
Materials stored in appropriate containers	✓			
Stored materials protected from rainwater	✓			
Materials stored indoors and on pallets, if possible	✓			
Materials stored outdoors covered with sheets of plastic or other types of cover			✓	
Hazardous materials stored according to federal, state, and local requirements	✓			

Spill Prevention

Precautions taken to prevent spills	✓			
Sweeping and dry mopping are frequently done to reduce the amount of dirt, fluids, and other residues that accumulate in work areas	✓			
Sweeping and dry mopping are done instead of cleaning up with water whenever possible, especially outside	✓			
Updated spill prevention plan for facility	✓			
Updated spill cleanup plan for facility	✓			
Spills cleaned up promptly	✓			
Absorbents like sand and special spill cleanup powders on hand to help clean up spills	✓			
Rags kept handy for cleanup	✓			

City of Rosenberg

Storm Water Pollution Prevention Plan (SWPPP)

Facility Checklist

(To be complete quarterly)

Facility Name: WP#5

Address: 401 COTTONWOOD CHURCH Rd

Phone #: ( ) Fax #: ( )

Date: 7/11/11 Inspector's Name and Title: Steve Vaorecla (Utilities Sup)

Building and Grounds Maintenance

Are the following conditions met?	Yes	No	N/A	Comments
Clean up without water using sweeping or wiping	✓			
Spills prevented and cleaned up	✓			
Debris and litter cleaned up and not washed into storm drains	✓			
Detergents not used in steam or pressure washing			✓	
Catch basins and storm drains cleaned regularly	✓			
Soil erosion controlled	✓			
Lawn clippings, trimmings from trees and other landscaping disposed of properly			✓	
Correct types and amounts of fertilizer, herbicides, and/or pesticides for landscaping used			✓	
Overwatering avoided			✓	
Fertilizers, pesticides, or herbicides not applied during rainy weather			✓	

Waste Disposal and Reduction

Trash dumpster lids kept closed			✓	
Dropped trash picked up	✓			
Dumpster areas swept			✓	
Wastes cleaned up with broom instead of water	✓			
Liquid wastes kept out of dumpsters			✓	

Form Updated 6/10/09

Call 832-595-3960 for more information, or go to the City website at www.ci.rosenberg.tx.us

Please record changes to this document in the Updates to Storm Water Pollution Prevention Records.

Are the following conditions met?	Yes	No	N/A	Comments
Hazardous or harmful wastes kept out of dumpsters or trash containers	✓			
Leaking dumpsters fixed			✓	
No wastes are put in storm drains or sewers	✓			
Paper, cans, and plastics are recycled	✓			
Smaller volumes of materials and supplies are ordered to avoid waste	✓			
City recycling and waste reduction guidelines are followed	✓			

Equipment Maintenance

Prevention of spills	✓			
Fueling areas covered			✓	
Sweep or use other dry methods rather than hosing down the fuel area for cleaning			✓	
Signs posted warning against "topping off"			✓	
Read and follow the guidelines that apply	✓			
Work area kept clean	✓			
Inspection for leaks, malfunctions, and staining on or around vehicles and equipment			✓	
Oil filters drained before disposal or recycling			✓	
All fluids contained or drained from wrecked vehicles or equipment that has to be replaced			✓	
Cracked batteries stored in a non-leaking secondary container			✓	
Full drip pans or other open containers of used liquids not left sitting around			✓	
Organized inventory of materials maintained	✓			

Are the following conditions met?	Yes	No	N/A	Comments
Recycling of waste materials (e.g. used oil, spent solvents, batteries) labeled and tracked			✓	
Drip pans used for vehicles and equipment waiting for maintenance			✓	
Parked under cover to prevent exposure to rainfall			✓	
Parts or equipment not washed outside			✓	
Equipment or vehicles washed in designated areas where wash water is released into sanitary sewer system			✓	
Barriers or absorbent pads used to prevent dirty, polluted wash water from entering a storm drain inlet			✓	
Wash water contained and recycled. Wash water does not flow into gutter or storm drain.			✓	
Spills, leaks, wastes or wash water from vehicles or equipment not allowed to enter the storm drain			✓	

Materials Handling and Storage

Handling instructions read and followed for all stored materials	✓			
Storage containers are spill-proof; inspected for leaks and routine maintenance performed	✓			
Storage tanks and piping systems inspected for leaks or failures and routine maintenance performed	✓			
Safeguards (such as berms or secondary containment basins) used against accidental releases of liquids from storage area			✓	

Are the following conditions met?	Yes	No	N/A	Comments
Materials stored in appropriate containers	✓			
Stored materials protected from rainwater	✓			
Materials stored indoors and on pallets, if possible	✓			
Materials stored outdoors covered with sheets of plastic or other types of cover			✓	
Hazardous materials stored according to federal, state, and local requirements	✓			

Spill Prevention

Precautions taken to prevent spills	✓			
Sweeping and dry mopping are frequently done to reduce the amount of dirt, fluids, and other residues that accumulate in work areas	✓			
Sweeping and dry mopping are done instead of cleaning up with water whenever possible, especially outside	✓			
Updated spill prevention plan for facility	✓			
Updated spill cleanup plan for facility	✓			
Spills cleaned up promptly	✓			
Absorbents like sand and special spill cleanup powders on hand to help clean up spills	✓			
Rags kept handy for cleanup	✓			

City of Rosenberg

Storm Water Pollution Prevention Plan (SWPPP)

Facility Checklist

(To be complete quarterly)

Facility Name: WP#6

Address: 7075 Reading Rd.

Phone #: (___)_____ Fax #: (___)_____

Date: 7/11/11 Inspector's Name and Title: Steve Vavrecka (Utilities Supv)

Building and Grounds Maintenance

Are the following conditions met?	Yes	No	N/A	Comments
Clean up without water using sweeping or wiping	✓			
Spills prevented and cleaned up	✓			
Debris and litter cleaned up and not washed into storm drains	✓			
Detergents not used in steam or pressure washing			✓	
Catch basins and storm drains cleaned regularly	✓			
Soil erosion controlled	✓			
Lawn clippings, trimmings from trees and other landscaping disposed of properly			✓	
Correct types and amounts of fertilizer, herbicides, and/or pesticides for landscaping used			✓	
Overwatering avoided			✓	
Fertilizers, pesticides, or herbicides not applied during rainy weather			✓	

Waste Disposal and Reduction

Trash dumpster lids kept closed			✓	
Dropped trash picked up	✓			
Dumpster areas swept			✓	
Wastes cleaned up with broom instead of water	✓			
Liquid wastes kept out of dumpsters			✓	

Form Updated 6/10/09

Call 832-595-3960 for more information, or go to the City website at www.ci.rosenberg.tx.us

Please record changes to this document in the Updates to Storm Water Pollution Prevention Records.

City of Rosenberg

Are the following conditions met?	Yes	No	N/A	Comments
Hazardous or harmful wastes kept out of dumpsters or trash containers	✓			
Leaking dumpsters fixed			✓	
No wastes are put in storm drains or sewers	✓			
Paper, cans, and plastics are recycled	✓			
Smaller volumes of materials and supplies are ordered to avoid waste	✓			
City recycling and waste reduction guidelines are followed	✓			

Equipment Maintenance

Prevention of spills	✓			
Fueling areas covered			✓	
Sweep or use other dry methods rather than hosing down the fuel area for cleaning			✓	
Signs posted warning against "topping off"			✓	
Read and follow the guidelines that apply	✓			
Work area kept clean	✓			
Inspection for leaks, malfunctions, and staining on or around vehicles and equipment			✓	
Oil filters drained before disposal or recycling			✓	
All fluids contained or drained from wrecked vehicles or equipment that has to be replaced			✓	
Cracked batteries stored in a non-leaking secondary container			✓	
Full drip pans or other open containers of used liquids not left sitting around			✓	
Organized inventory of materials maintained			✓	

Form Updated 6/10/09

Call 832-595-3960 for more information, or go to the City website at www.ci.rosenberg.tx.us

Please record changes to this document in the Updates to Storm Water Pollution Prevention Records.

Are the following conditions met?	Yes	No	N/A	Comments
Recycling of waste materials (e.g. used oil, spent solvents, batteries) labeled and tracked			✓	
Drip pans used for vehicles and equipment waiting for maintenance			✓	
Parked under cover to prevent exposure to rainfall			✓	
Parts or equipment not washed outside			✓	
Equipment or vehicles washed in designated areas where wash water is released into sanitary sewer system			✓	
Barriers or absorbent pads used to prevent dirty, polluted wash water from entering a storm drain inlet			✓	
Wash water contained and recycled. Wash water does not flow into gutter or storm drain.			✓	
Spills, leaks, wastes or wash water from vehicles or equipment not allowed to enter the storm drain			✓	

Materials Handling and Storage

Handling instructions read and followed for all stored materials	✓			
Storage containers are spill-proof; inspected for leaks and routine maintenance performed	✓			
Storage tanks and piping systems inspected for leaks or failures and routine maintenance performed	✓			
Safeguards (such as berms or secondary containment basins) used against accidental releases of liquids from storage area			✓	

Are the following conditions met?	Yes	No	N/A	Comments
Materials stored in appropriate containers	✓			
Stored materials protected from rainwater	✓			
Materials stored indoors and on pallets, if possible	✓			
Materials stored outdoors covered with sheets of plastic or other types of cover			✓	
Hazardous materials stored according to federal, state, and local requirements	✓			

Spill Prevention

Precautions taken to prevent spills	✓			
Sweeping and dry mopping are frequently done to reduce the amount of dirt, fluids, and other residues that accumulate in work areas	✓			
Sweeping and dry mopping are done instead of cleaning up with water whenever possible, especially outside	✓			
Updated spill prevention plan for facility	✓			
Updated spill cleanup plan for facility	✓			
Spills cleaned up promptly	✓			
Absorbents like sand and special spill cleanup powders on hand to help clean up spills	✓			
Rags kept handy for cleanup	✓			

City of Rosenberg

Storm Water Pollution Prevention Plan (SWPPP)

Facility Checklist

(To be complete quarterly)

Facility Name: WP#7

Address: 4926 OAK BRIAR LN

Phone #: (___) _____ Fax #: (___) _____

Date: 7/11/11 Inspector's Name and Title: Steve Varela (Utilities Supv)

Building and Grounds Maintenance

Are the following conditions met?	Yes	No	N/A	Comments
Clean up without water using sweeping or wiping	✓			
Spills prevented and cleaned up	✓			
Debris and litter cleaned up and not washed into storm drains	✓			
Detergents not used in steam or pressure washing			✓	
Catch basins and storm drains cleaned regularly	✓			
Soil erosion controlled	✓			
Lawn clippings, trimmings from trees and other landscaping disposed of properly			✓	
Correct types and amounts of fertilizer, herbicides, and/or pesticides for landscaping used			✓	
Overwatering avoided			✓	
Fertilizers, pesticides, or herbicides not applied during rainy weather			✓	

Waste Disposal and Reduction

Trash dumpster lids kept closed			✓	
Dropped trash picked up	✓			
Dumpster areas swept			✓	
Wastes cleaned up with broom instead of water	✓			
Liquid wastes kept out of dumpsters			✓	

Form Updated 6/10/09

Call 832-595-3960 for more information, or go to the City website at www.ci.rosenberg.tx.us

Please record changes to this document in the Updates to Storm Water Pollution Prevention Records.

City of Rosenberg

Are the following conditions met?	Yes	No	N/A	Comments
Hazardous or harmful wastes kept out of dumpsters or trash containers	✓			
Leaking dumpsters fixed			✓	
No wastes are put in storm drains or sewers	✓			
Paper, cans, and plastics are recycled	✓			
Smaller volumes of materials and supplies are ordered to avoid waste	✓			
City recycling and waste reduction guidelines are followed	✓			

Equipment Maintenance

Prevention of spills	✓		✓	
Fueling areas covered			✓	
Sweep or use other dry methods rather than hosing down the fuel area for cleaning			✓	
Signs posted warning against "topping off"			✓	
Read and follow the guidelines that apply	✓			
Work area kept clean	✓			
Inspection for leaks, malfunctions, and staining on or around vehicles and equipment			✓	
Oil filters drained before disposal or recycling			✓	
All fluids contained or drained from wrecked vehicles or equipment that has to be replaced			✓	
Cracked batteries stored in a non-leaking secondary container			✓	
Full drip pans or other open containers of used liquids not left sitting around			✓	
Organized inventory of materials maintained	✓			

Call 832-595-3960 for more information, or go to the City website at www.ci.rosenberg.tx.us

Please record changes to this document in the Updates to Storm Water Pollution Prevention Records.

Are the following conditions met?	Yes	No	N/A	Comments
Recycling of waste materials (e.g. used oil, spent solvents, batteries) labeled and tracked			✓	
Drip pans used for vehicles and equipment waiting for maintenance			✓	
Parked under cover to prevent exposure to rainfall			✓	
Parts or equipment not washed outside			✓	
Equipment or vehicles washed in designated areas where wash water is released into sanitary sewer system			✓	
Barriers or absorbent pads used to prevent dirty, polluted wash water from entering a storm drain inlet			✓	
Wash water contained and recycled. Wash water does not flow into gutter or storm drain.			✓	
Spills, leaks, wastes or wash water from vehicles or equipment not allowed to enter the storm drain			✓	

Materials Handling and Storage

Handling instructions read and followed for all stored materials	✓			
Storage containers are spill-proof; inspected for leaks and routine maintenance performed	✓			
Storage tanks and piping systems inspected for leaks or failures and routine maintenance performed	✓			
Safeguards (such as berms or secondary containment basins) used against accidental releases of liquids from storage area			✓	

Are the following conditions met?	Yes	No	N/A	Comments
Materials stored in appropriate containers	✓			
Stored materials protected from rainwater	✓			
Materials stored indoors and on pallets, if possible	✓			
Materials stored outdoors covered with sheets of plastic or other types of cover			✓	
Hazardous materials stored according to federal, state, and local requirements	✓			

Spill Prevention

Precautions taken to prevent spills	✓			
Sweeping and dry mopping are frequently done to reduce the amount of dirt, fluids, and other residues that accumulate in work areas	✓			
Sweeping and dry mopping are done instead of cleaning up with water whenever possible, especially outside	✓			
Updated spill prevention plan for facility	✓			
Updated spill cleanup plan for facility	✓			
Spills cleaned up promptly	✓			
Absorbents like sand and special spill cleanup powders on hand to help clean up spills	✓			
Rags kept handy for cleanup	✓			

City of Rosenberg

Storm Water Pollution Prevention Plan (SWPPP)

Facility Checklist

(To be complete quarterly)

Facility Name: City of Rosenberg / Street Dept.
Address: 2220 Mulcahy

Phone #: (832) 595-3579 Fax #: (832) 595-3501

Date: 7/12/11 Inspector's Name and Title: Mike Parra / Street Supervisor

Building and Grounds Maintenance

Are the following conditions met?	Yes	No	N/A	Comments
Clean up without water using sweeping or wiping	✓			
Spills prevented and cleaned up	✓			
Debris and litter cleaned up and not washed into storm drains	✓			
Detergents not used in steam or pressure washing	✓			
Catch basins and storm drains cleaned regularly	✓			
Soil erosion controlled	✓			
Lawn clippings, trimmings from trees and other landscaping disposed of properly	✓			
Correct types and amounts of fertilizer, herbicides, and/or pesticides for landscaping used	✓			
Overwatering avoided	✓			
Fertilizers, pesticides, or herbicides not applied during rainy weather	✓			

Waste Disposal and Reduction

Trash dumpster lids kept closed	✓			
Dropped trash picked up	✓			
Dumpster areas swept	✓			
Wastes cleaned up with broom instead of water	✓			
Liquid wastes kept out of dumpsters	✓			

Call 832-595-3960 for more information, or go to the City website at www.ci.rosenberg.tx.us

Please record changes to this document in the Updates to Storm Water Pollution Prevention Records.

Are the following conditions met?	Yes	No	N/A	Comments
Hazardous or harmful wastes kept out of dumpsters or trash containers	✓			
Leaking dumpsters fixed	✓			
No wastes are put in storm drains or sewers	✓			
Paper, cans, and plastics are recycled	✓			CANS only
Smaller volumes of materials and supplies are ordered to avoid waste	✓			
City recycling and waste reduction guidelines are followed		✓		

Equipment Maintenance

Prevention of spills	✓			
Fueling areas covered	✓			
Sweep or use other dry methods rather than hosing down the fuel area for cleaning	✓			
Signs posted warning against "topping off"	✓			
Read and follow the guidelines that apply	✓			
Work area kept clean	✓			
Inspection for leaks, malfunctions, and staining on or around vehicles and equipment	✓			
Oil filters drained before disposal or recycling			✓	
All fluids contained or drained from wrecked vehicles or equipment that has to be replaced			✓	
Cracked batteries stored in a non-leaking secondary container			✓	
Full drip pans or other open containers of used liquids not left sitting around			✓	
Organized inventory of materials maintained	✓			

Call 832-595-3960 for more information, or go to the City website at www.ci.rosenberg.tx.us

Please record changes to this document in the Updates to Storm Water Pollution Prevention Records.

Are the following conditions met?	Yes	No	N/A	Comments
Recycling of waste materials (e.g. used oil, spent solvents, batteries) labeled and tracked			✓	
Drip pans used for vehicles and equipment waiting for maintenance			✓	
Parked under cover to prevent exposure to rainfall	✓			
Parts or equipment not washed outside			✓	
Equipment or vehicles washed in designated areas where wash water is released into sanitary sewer system	✓			
Barriers or absorbent pads used to prevent dirty, polluted wash water from entering a storm drain inlet	✓			
Wash water contained and recycled. Wash water does not flow into gutter or storm drain.	✓			
Spills, leaks, wastes or wash water from vehicles or equipment not allowed to enter the storm drain	✓			

Materials Handling and Storage

Handling instructions read and followed for all stored materials	✓			
Storage containers are spill-proof; inspected for leaks and routine maintenance performed	✓			
Storage tanks and piping systems inspected for leaks or failures and routine maintenance performed			✓	
Safeguards (such as berms or secondary containment basins) used against accidental releases of liquids from storage area			✓	

Are the following conditions met?	Yes	No	N/A	Comments
Materials stored in appropriate containers	✓			
Stored materials protected from rainwater	✓			
Materials stored indoors and on pallets, if possible	✓			
Materials stored outdoors covered with sheets of plastic or other types of cover	✓			
Hazardous materials stored according to federal, state, and local requirements	✓			

Spill Prevention

Precautions taken to prevent spills	✓			
Sweeping and dry mopping are frequently done to reduce the amount of dirt, fluids, and other residues that accumulate in work areas	✓			
Sweeping and dry mopping are done instead of cleaning up with water whenever possible, especially outside	✓			
Updated spill prevention plan for facility	✓			
Updated spill cleanup plan for facility	✓			
Spills cleaned up promptly	✓			
Absorbents like sand and special spill cleanup powders on hand to help clean up spills	✓			
Rags kept handy for cleanup	✓			